DTC	P0327	Knock Sensor 1 Circuit Low Input (Bank 1 or Single Sensor)

DTC	P0328	Knock Sensor 1 Circuit High Input (Bank 1 or Single Sensor)

DTC	P0332	Knock Sensor 2 Circuit Low Input (Bank 2)

DTC	P0333	Knock Sensor 2 Circuit High Input (Bank 2)

ES

DESCRIPTION

A flat type knock sensor (non-resonant type) has a structure that can detect vibrations over a wide band of frequencies: between approximately 6 kHz and 15 kHz.
Knock sensors are fitted onto the engine block to detect engine knocking.
The knock sensor contains a piezoelectric element which generates a voltage when the engine block vibrates due to knocking. Any occurrence of engine knocking can be suppressed by delaying the ignition timing.

DTC No.	DTC Detection Condition	Trouble Area
P0327 P0332	Output voltage of knock sensor 1 or 2 is less than 0.5 V (1 trip detection logic)	• Short in knock sensor 1 or 2 circuit • Knock sensor 1 or 2 • ECM
P0328 P0333	Output voltage of knock sensor 1 or 2 is more than 4.5 V (1 trip detection logic)	• Open in knock sensor 1 or 2 circuit • Knock sensor 1 or 2 • ECM

HINT:
When any of DTCs P0327, P0328, P0332 and P0333 are set, the ECM enters fail-safe mode. During fail-safe mode, the ignition timing is delayed to its maximum retardation. Fail-safe mode continues until the ignition switch is turned off.
Reference: Inspection using an oscilloscope

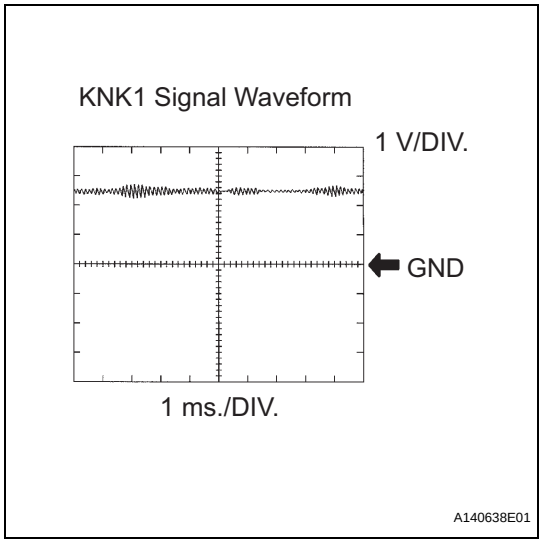

The correct waveform is as shown.

Item	Content
Terminals	KNK1 - EKNK or KNK2 - EKN2
Equipment Settings	0.01 to 10 V/Division, 0.01 to 10 ms./Division
Conditions	Keep engine speed at 4000 rpm with warm engine

MONITOR DESCRIPTION

The knock sensor, located on the cylinder block, detects spark knock. When a spark knock occurs, the piezoelectric element of the sensor vibrates. When the ECM detects a voltage in this frequency range, it retards the ignition timing to suppress the spark knock.
The ECM also senses background engine noise with the knock sensor and uses this noise to check for faults in the sensor. If the knock sensor signal level is too low for more than 10 seconds, or if the knock sensor output voltage is outside the normal range, the ECM interprets this as a fault in the knock sensor and sets a DTC.

MONITOR STRATEGY

Related DTCs	P0327: Knock sensor (Bank 1) open/short (Low voltage) P0328: Knock sensor (Bank 1) open/short (High voltage) P0332: Knock sensor (Bank 2) open/short (Low voltage) P0333: Knock sensor (Bank 2) open/short (High voltage)
Required Sensors / Components (Main)	Knock sensor (Bank 1 and 2)
Required Sensors / Components (Related)	-
Frequency of Operation	Continuous
Duration	1 second
MIL Operation	Immediate
Sequence of Operation	None

TYPICAL ENABLING CONDITIONS

The monitor will run whenever these DTCs are not present	None
Battery voltage	10.5 V or more
Time after engine start	5 seconds or more
Ignition switch	ON
Starter	OFF

TYPICAL MALFUNCTION THRESHOLDS

Knock Sensor Range Check (Low voltage) P0327 and P0332:

Knock sensor voltage	Less than 0.5 V

Knock Sensor Range Check (High voltage) P0328 and P0333:

Knock sensor voltage	More than 4.5 V

WIRING DIAGRAM

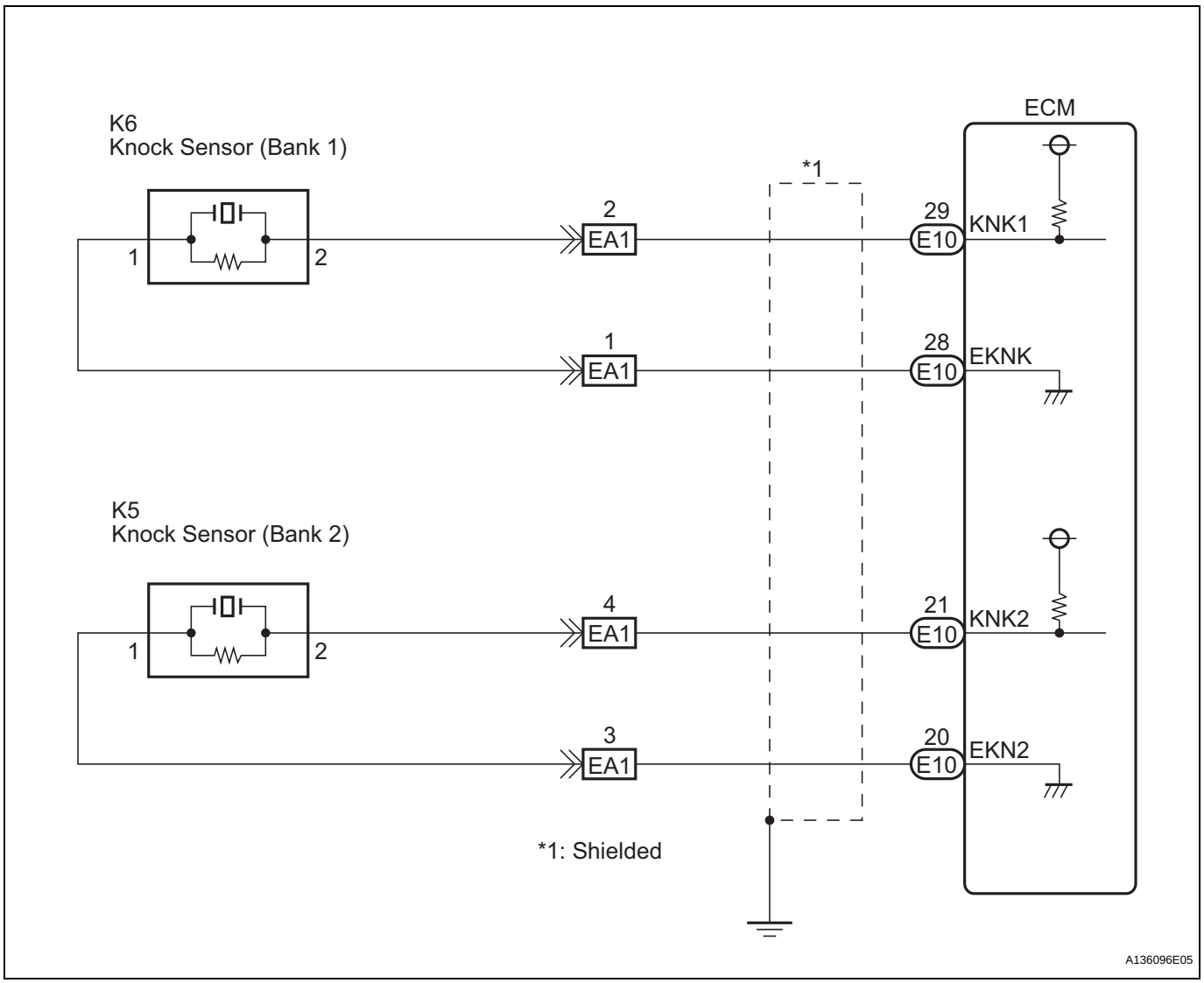

ES

INSPECTION PROCEDURE

HINT:

- DTCs P0327 and P0328 are for the bank 1 knock sensor circuit.
- DTCs P0332 and P0333 are for the bank 2 knock sensor circuit.
- Read freeze frame data using the intelligent tester. The ECM records vehicle and driving condition information as freeze frame data the moment a DTC is stored. When troubleshooting, freeze frame data can be helpful in determining whether the vehicle was running or stopped, whether the engine was warmed up or not, whether the air-fuel ratio was lean or rich, as well as other data recorded at the time of a malfunction.

1	READ VALUE OF DTC OUTPUT (CHECK KNOCK SENSOR CIRCUIT)

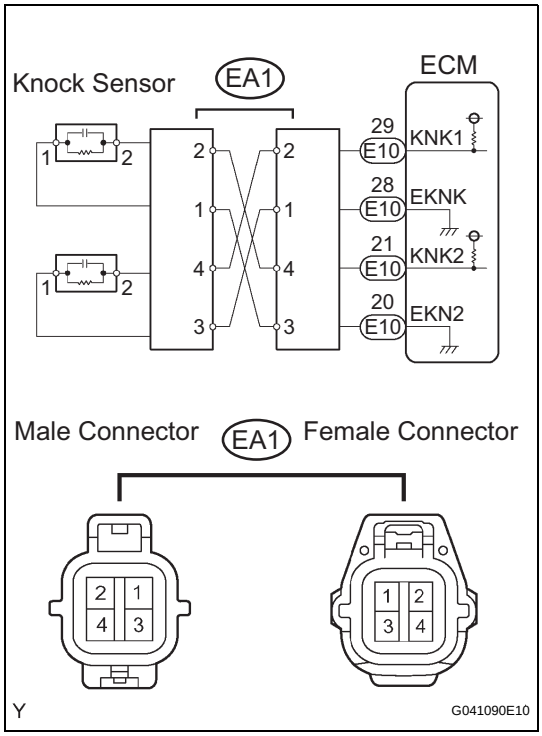

(a) Disconnect the EA1 connector.
(b) Using lead wires, connect the connectors as follows.

Male Connector - Female Connector
Terminal 2 - Terminal 4
Terminal 1 - Terminal 3
Terminal 4 - Terminal 2
Terminal 3 - Terminal 1

(c) Warm up the engine.
(d) Run the engine at 3000 rpm for 10 seconds or more.
(e) Connect the intelligent tester to the DLC3.
(f) Turn the ignition switch to the ON position and turn the intelligent tester on.
(g) Select the items: DIAGNOSIS / ENHANCED OBD II / DTC INFO / CURRENT CODES.
(h) Read the DTCs.

Result

Display	Proceed to
DTCs that are same as when vehicle brought in P0327, P0328 → P0327, P0328 or P0332, P0333 → P0332, P0333	**A**
DTCs that are different from when vehicle brought in P0327, P0328 → P0332, P0333 or P0332, P0333 → P0327, P0328	**B**

(i) Reconnect the EA1 connector.

B → **Go to step 4**

A

2 CHECK HARNESS OR CONNECTOR (EA1 CONNECTOR - ECM)

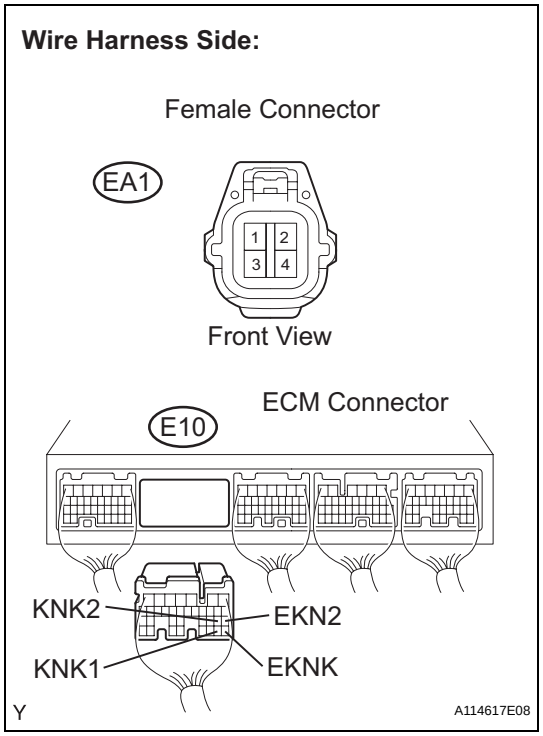

(a) Disconnect the EA1 connector.
(b) Disconnect the E10 ECM connector.
(c) Measure the resistance according to the value(s) in the table below.
Standard resistance:
Check for open

Tester Connection	Specified Condition
EA1 female connector 2 - KNK1 (E10-29)	Below 1 Ω
EA1 female connector 1 - EKNK (E10-28)	Below 1 Ω
EA1 female connector 4 - KNK2 (E10-21)	Below 1 Ω
EA1 female connector 3 - EKN2 (E10-20)	Below 1 Ω

Check for short

Tester Connection	Specified Condition
EA1 female connector 2 or KNK1 (E10-29) - Body ground	10 kΩ or higher
EA1 female connector 1 or EKNK (E10-28) - Body ground	10 kΩ or higher
EA1 female connector 4 or KNK2 (E10-21) - Body ground	10 kΩ or higher
EA1 female connector 3 or EKN2 (E10-20) - Body ground	10 kΩ or higher

(d) Reconnect the EA1 connector.
(e) Reconnect the ECM connector.

NG → **REPAIR OR REPLACE HARNESS OR CONNECTOR (EA1 CONNECTOR - ECM)**

OK

3 INSPECT ECM

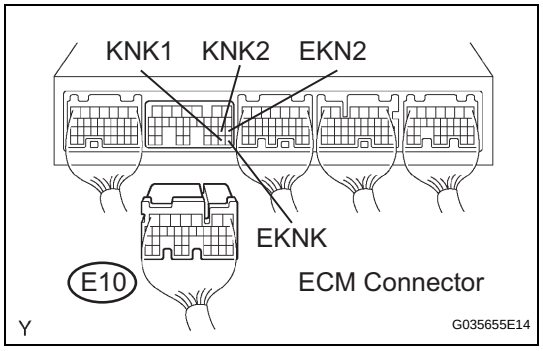

(a) Disconnect the E10 ECM connector.
(b) Turn the ignition switch to the ON position.
(c) Measure the voltage according to the value(s) in the table below.
Standard voltage

Tester Connection	Specified Condition
KNK1 (E10-29) - EKNK (E10-28)	4.5 to 5.5 V
KNK2 (E10-21) - EKN2 (E10-20)	4.5 to 5.5 V

(d) Reconnect the ECM connector.
NOTICE:
Fault may be intermittent. Check the wire harness and connectors carefully and retest.

NG → **REPLACE ECM (See page ES-498)**

OK

CHECK FOR INTERMITTENT PROBLEMS

4 INSPECT KNOCK SENSOR

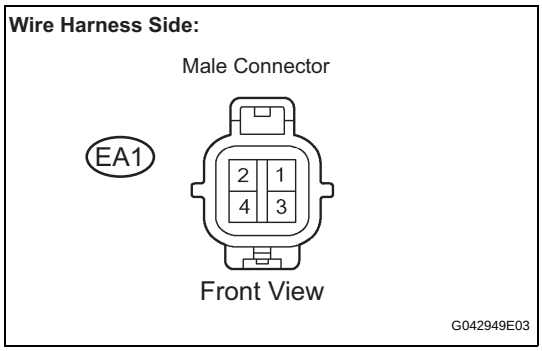

(a) Disconnect the EA1 connector.
(b) Measure the resistance according to the value(s) in the table below.

Standard resistance

Tester Connection	Specified Condition
EA1 male connector 1 - 2	120 to 280 kΩ
EA1 male connector 3 - 4	120 to 280 kΩ

(c) Reconnect the EA1 connector.

OK → **CHECK FOR INTERMITTENT PROBLEMS**

NG

5 CHECK HARNESS AND CONNECTOR (EA1 CONNECTOR - KNOCK SENSOR)

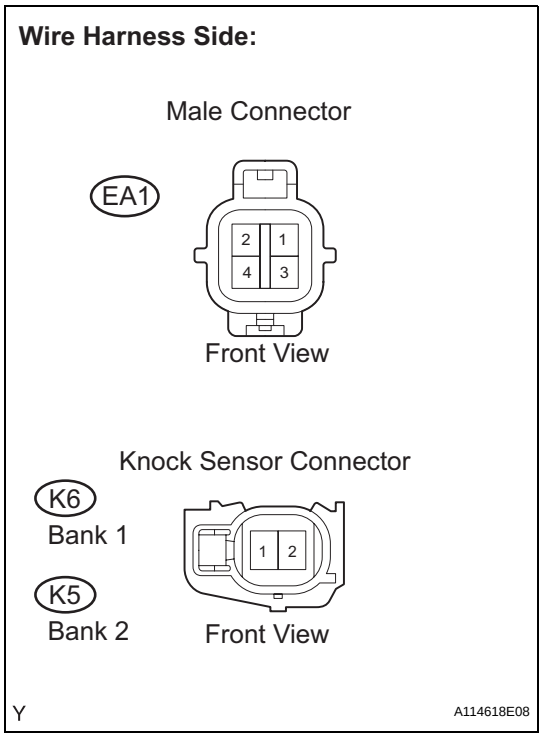

HINT:
- If DTC P0327 or P0328 has changed to P0332 or P0333, check the knock sensor circuit on the right bank side.
- If DTC P0332 or P0333 has changed to P0327 or P0328, check the knock sensor circuit on the left bank side.

(a) Disconnect the EA1 connector.
(b) Disconnect the K6 and K5 knock sensor connectors.
(c) Measure the resistance according to the value(s) in the table below.

Standard resistance:

Check for open

Tester Connection	Specified Condition
EA1 male connector 2 - K6-2	Below 1 Ω
EA1 male connector 1 - K6-1	Below 1 Ω
EA1 male connector 4 - K5-2	Below 1 Ω
EA1 male connector 3 - K5-1	Below 1 Ω

Check for short

Tester Connection	Specified Condition
EA1 male connector 2 or K6-2 - Body ground	10 kΩ or higher
EA1 male connector 1 or K6-1 - Body ground	10 kΩ or higher
EA1 male connector 4 or K5-2 - Body ground	10 kΩ or higher
EA1 male connector 3 or K5-1 - Body ground	10 kΩ or higher

(d) Reconnect the EA1 connector.
(e) Reconnect the knock sensor connector.

NG → REPAIR OR REPLACE HARNESS OR CONNECTOR (EA1 CONNECTOR - KNOCK SENSOR)

OK

REPLACE KNOCK SENSOR (See page ES-520)