DTC	P0335	Crankshaft Position Sensor "A" Circuit

DTC	P0339	Crankshaft Position Sensor "A" Circuit Intermittent

DESCRIPTION

The Crankshaft Position (CKP) sensor system consists of a CKP sensor plate and a pickup coil. The sensor plate has 34 teeth and is installed on the crankshaft. The pickup coil is made of an iron core and a magnet.

The sensor plate rotates as each tooth passes through the pickup coil, and a pulse signal is created. The pickup coil generates 34 signals per engine revolution. Based on these signals, the ECM calculates the crankshaft position and engine RPM. Using these calculations, the fuel injection time and ignition timing are controlled.

ES

DTC No.	DTC Detection Condition	Trouble Area
P0335	• No CKP sensor signal to ECM while cranking (1 trip detection logic) • No CKP sensor signal to ECM at engine speed of 600 rpm or more (1 trip detection logic)	• Open or short in CKP sensor circuit • CKP sensor • Sensor plate (CKP sensor plate) • ECM
P0339	Under conditions (a), (b) and (c), no CKP sensor signal to ECM for 0.05 seconds or more (1 trip detection logic): (a) Engine speed 1000 rpm or more (b) Starter signal OFF (c) 3 seconds or more have lapsed since starter signal switched from ON to OFF	• Open or short in CKP sensor circuit • CKP sensor • Sensor plate (CKP sensor plate) • ECM

Reference: Inspection using an oscilloscope

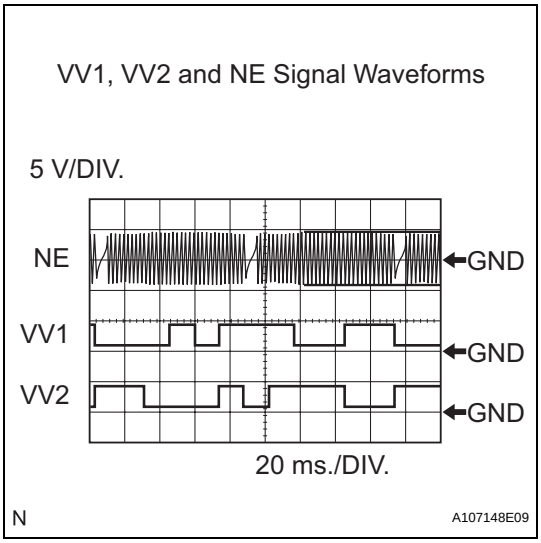

HINT:

- The correct waveform is shown in the illustration.
- VV1+ and VV2+ stand for the VVT sensor signal, and NE+ stands for the CKP sensor signal.

Item	Content
Terminals	VV1+ - VV1- VV2+ - VV2- NE+ - NE-
Equipment Settings	5 V/Division, 20 ms./Division
Conditions	Cranking or idling

MONITOR DESCRIPTION

If there is no signal from the CKP sensor despite the engine revolving, the ECM interprets this as a malfunction of the sensor.
If the malfunction is not repaired successfully, a DTC is set 10 seconds after the engine is next started.

MONITOR STRATEGY

Related DTCs	P0335: Crankshaft position sensor range check during cranking P0335: Crankshaft position sensor range check during engine running
Required Sensors / Components (Main)	Crankshaft Position (CKP) sensor
Required Sensors / Components (Related)	-
Frequency of Operation	Continuous
Duration	3 times
MIL Operation	Immediate
Sequence of Operation	None

TYPICAL ENABLING CONDITIONS

All:

The monitor will run whenever these DTCs are not present	None

Crankshaft Position Sensor Range Check during Cranking P0335:

Starter	OFF
Ignition switch	ON
Battery voltage	7 V or more
Minimum battery voltage while starter ON	Less than 11 V
Number of VVT sensor signal pulse	6 times
CMP sensor circuit fail	Not detected

Crankshaft Position Sensor Range Check during Engine Running P0335:

Engine speed	600 rpm or more
Starter	OFF
Time after starter from ON to OFF	3 seconds or more

TYPICAL MALFUNCTION THRESHOLDS

Crankshaft Position Sensor Range Check during Cranking P0335:

Number of crankshaft position sensor signal pulse	132 or less, or 174 or more

Crankshaft Position Sensor Range Check during Engine Running P0335:

CKP sensor signal	No signal

COMPONENT OPERATING RANGE

CKP sensor	• CKP sensor output voltage fluctuates while crankshaft is revolving • 34 CKP sensor signals per crankshaft revolution

WIRING DIAGRAM

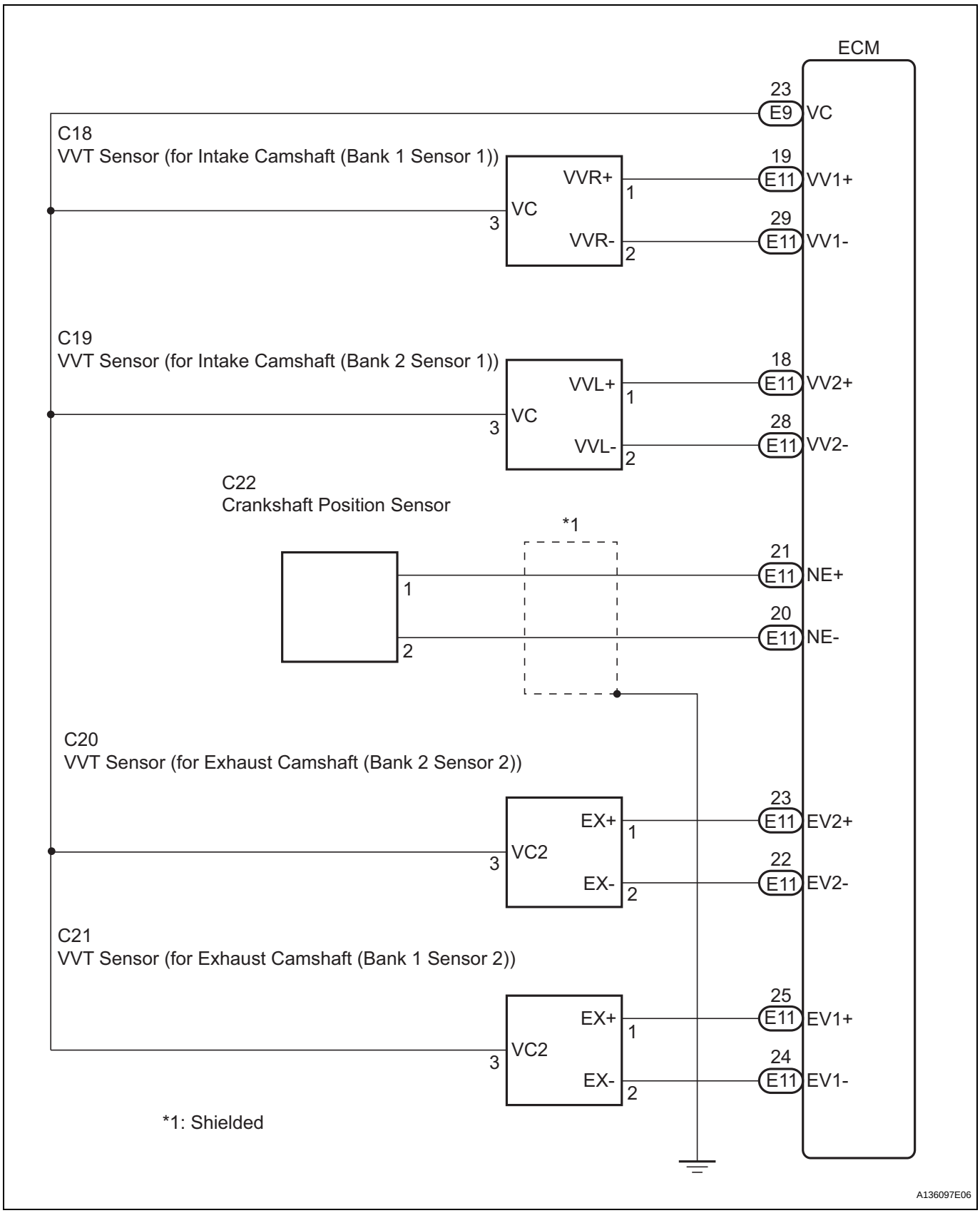

INSPECTION PROCEDURE

HINT:

- If no problem is found by this diagnostic troubleshooting procedure, troubleshoot the engine mechanical systems.
- Check the engine speed. The engine speed can be checked by using the intelligent tester. Perform the following procedure:
  (a) Connect the intelligent tester to the DLC3.
  (b) Start the engine.
  (c) Turn the tester on.
  (d) Select the following menu items: DIAGNOSIS / ENHANCED OBD II / DATA LIST / PRIMARY / ENGINE SPD.
  The engine speed may be indicated as zero despite the engine revolving normally. This is caused by a lack of NE signals from the Crankshaft Position (CKP) sensor. Alternatively, the engine speed may be indicated as lower than the actual engine speed, if the CKP sensor voltage output is insufficient.
- Read freeze frame data using the intelligent tester. The ECM records vehicle and driving condition information as freeze frame data the moment a DTC is stored. When troubleshooting, freeze frame data can be helpful in determining whether the vehicle was running or stopped, whether the engine was warmed up or not, whether the air-fuel ratio was lean or rich, as well as other data recorded at the time of a malfunction.

ES

1	INSPECT CRANKSHAFT POSITION SENSOR (RESISTANCE)

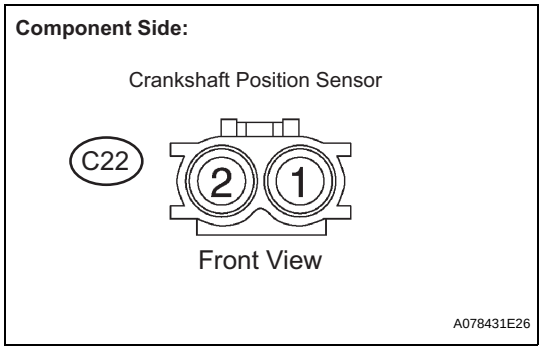

(a) Disconnect the C22 Crankshaft Position (CKP) sensor connector.
(b) Measure the resistance according to the value(s) in the table below.

Standard resistance

Tester Connection	Condition	Specified Condition
1 - 2	Cold	1630 to 2740 Ω
1 - 2	Hot	2065 to 3225 Ω

HINT:
Terms "cold" and "hot" refer to the temperature of the coils. "Cold" means approximately -10 to 50°C (14 to 122°F). "Hot" means approximately 50 to 100°C (122 to 212°F).

(c) Reconnect the CKP sensor connector.

NG → **REPLACE CRANKSHAFT POSITION SENSOR (See page ES-514)**

OK

2 CHECK HARNESS AND CONNECTOR (CRANKSHAFT POSITION SENSOR - ECM)

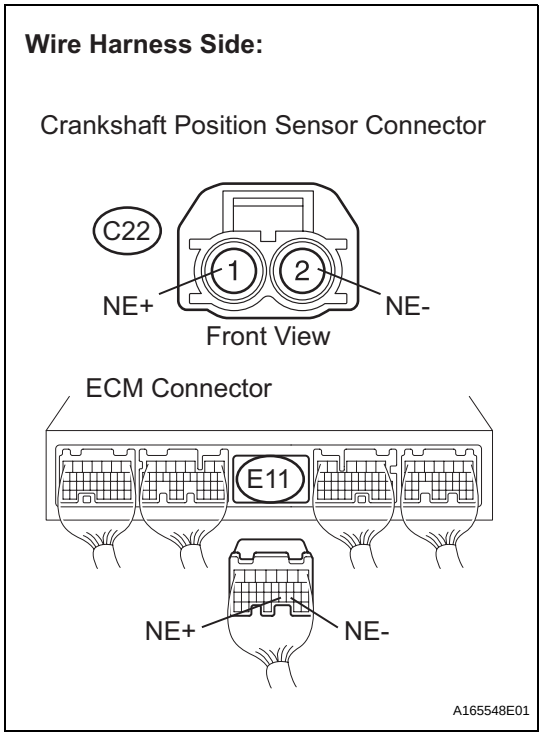

(a) Disconnect the C22 CKP sensor connector.
(b) Disconnect the E11 ECM connector.
(c) Measure the resistance according to the value(s) in the table below.

Standard resistance :

Check for open

Tester Connection	Specified Condition
NE+ (C22-1) - NE+ (E11-21)	Below 1 Ω
NE- (C22-2) - NE- (E11-20)	Below 1 Ω

Check for short

Tester Connection	Specified Condition
NE+ (C22-1) or NE+ (E11-21) - Body ground	10 kΩ or higher
NE- (C22-2) or NE- (E11-20) - Body ground	10 kΩ or higher

(d) Reconnect the ECM connector.
(e) Reconnect the CKP sensor connector.

NG → **REPAIR OR REPLACE HARNESS OR CONNECTOR (CRANKSHAFT POSITION SENSOR - ECM)**

OK

3 CHECK SENSOR INSTALLATION (CRANKSHAFT POSITION SENSOR)

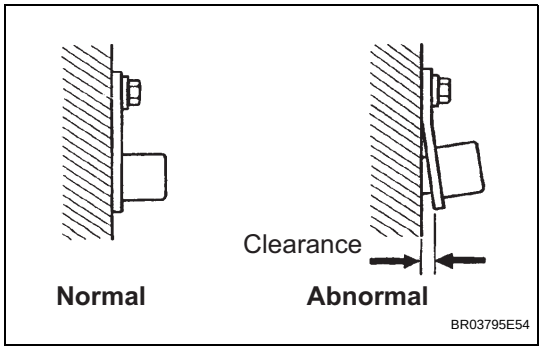

(a) Check the CKP sensor installation condition.

OK:

Sensor is installed correctly.

NG → **REPAIR OR REPLACE CRANKSHAFT POSITION SENSOR**

OK

4 CHECK CRANKSHAFT POSITION SENSOR PLATE (TEETH OF SENSOR PLATE)

(a) Check the teeth of the sensor plate.

OK:

Sensor plate does not have any cracks or deformation.

NG → **REPAIR OR REPLACE CRANKSHAFT POSITION SENSOR PLATE**

OK

REPLACE ECM (See page ES-498)