DTC	P0450	Evaporative Emission Control System Pressure Sensor / Switch

DTC	P0451	Evaporative Emission Control System Pressure Sensor Range / Performance

DTC	P0452	Evaporative Emission Control System Pressure Sensor / Switch Low Input

DTC	P0453	Evaporative Emission Control System Pressure Sensor / Switch High Input

DTC SUMMARY

DTCs	Monitoring Item	Malfunction Detection Condition	Trouble Area	Detection Timing	Detection Logic
P0450	Pressure sensor abnormal voltage fluctuation	Sensor output voltage rapidly fluctuates beyond upper and lower malfunction thresholds for 0.5 seconds.	• Pump module • ECM	• EVAP monitoring (ignition switch OFF) • Ignition switch ON	1 trip
P0451	Pressure sensor abnormal voltage fluctuation	Sensor output voltage fluctuates frequently in a certain time period.	• Pump module • Connector/wire harness (Pump module - ECM) • ECM	• EVAP monitoring (ignition switch OFF) • Engine running	2 trip
P0451	Pressure sensor constant voltage	Sensor output voltage does not vary in a certain time period.		EVAP monitoring (ignition switch OFF)	2 trip
P0452	Pressure sensor voltage low	Sensor output voltage is less than 0.45 V for 0.5 seconds.		• Ignition switch ON • EVAP monitoring (ignition switch OFF)	1 trip
P0453	Pressure sensor voltage high	Sensor output voltage is more than 4.9 V for 0.5 seconds.		• Ignition switch ON • EVAP monitoring (ignition switch OFF)	1 trip

HINT:
The canister pressure sensor is built into the canister pump module.

DESCRIPTION

The description can be found in the EVAP (Evaporative Emission) System (See page ES-409).

MONITOR DESCRIPTION

Pressure Sensor Specification:

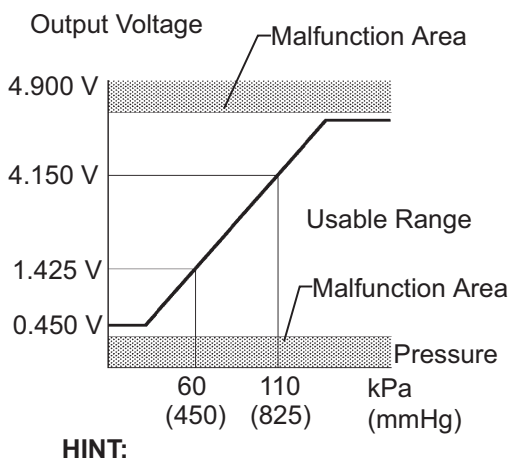

HINT:
Standard atmospheric Pressure is 101.3 kPa

A140644E06

1. DTC P0450: Pressure sensor abnormal voltage fluctuation
   If the pressure sensor voltage output rapidly fluctuates between less than 0.45 V and more than 4.9 V, the ECM interprets this as an open or short circuit malfunction in the pressure sensor or its circuit, and stops the EVAP (Evaporative Emission) system monitor. The ECM then illuminates the MIL and sets the DTC (1 trip detection logic).
2. DTC P0451: Pressure sensor abnormal voltage fluctuation or being constant
   If the pressure sensor voltage output fluctuates rapidly for 10 seconds, the ECM stops the EVAP system monitor. The ECM interprets this as the pressure sensor voltage fluctuating, and stops the EVAP system monitor. The ECM then illuminates the MIL and sets the DTC.
   Alternatively, if the sensor voltage output does not change for 10 seconds, the ECM interprets this as the sensor being stuck, and stops the monitor. The ECM then illuminates the MIL and sets the DTC. (Both the malfunctions are detected by 2 trip detection logic.)
3. DTC P0452: Pressure sensor voltage low
   If the pressure sensor voltage output is below 0.45 V, the ECM interprets this as an open or short circuit malfunction in the pressure sensor or its circuit, and stops the EVAP system monitor. The ECM then illuminates the MIL and sets the DTC (1 trip detection logic).
4. DTC P0453: Pressure sensor voltage high
   If the pressure sensor voltage output is 4.9 V or more, the ECM interprets this as an open or short circuit malfunction in the pressure sensor or its circuit, and stops the EVAP system monitor. The ECM then illuminates the MIL and sets the DTC (1 trip detection logic).

MONITOR STRATEGY

Related DTCs	P0450: Evaporative emission control system pressure sensor/switch chattering P0451: Evaporative emission control system pressure sensor noise P0451: Evaporative emission control system pressure sensor stuck P0452: Evaporative emission control system pressure sensor/switch low input P0453: Evaporative emission control system pressure sensor/switch high input
Required Sensors / Components	Pump module
Frequency of Operation	Once per driving cycle: P0451 sensor stuck Continuous: P0451 sensor noising, P0450, P0452 and P0453

Duration	Less than 15 seconds: P0451 (Pressure sensor noise) Within 2 minutes: P0451 (Pressure sensor stuck) 0.5 seconds: P0450, P0452, P0453
MIL Operation	Immediate: P0450, P0452, P0453 2 driving cycles: P0451
Sequence of Operation	None

TYPICAL ENABLING CONDITIONS

All:

The monitor will run whenever these DTCs are not present	None

P0451 (Noise monitor):

Atmospheric pressure	70 to 110 kPa (525 to 825 mmHg)
Battery voltage	10.5 V or more
IAT	4.4 to 35°C (40 to 95°F)
EVAP pressure sensor malfunction (P0450, P0452, P0453)	Not detected
Either of the following conditions 1 or 2 is met	-
1. Engine condition	Running
2. Time after key-off	5 or 7 or 9.5 hours

P0451 (Stuck monitor):

Battery voltage	10.5 V or more
IAT	4.4 to 35°C (40 to 95°F)
EVAP pressure sensor malfunction (P0450, P0452, P0453)	Not detected
Atmospheric pressure	70 to 110 kPa (525 to 825 mmHg)
Time after key-off	5 or 7 or 9.5 hours

P0450, P0452 and P0453:

Ignition switch	ON
Battery voltage	8 V or more
Starter	OFF

TYPICAL MALFUNCTION THRESHOLDS

(a) P0450: Pressure sensor chattering

EVAP pressure	Less than 42.11 kPa (316 mmHg), or more than 123.761 kPa (928 mmHg)

(b) P0451: Pressure sensor noise

Frequency that EVAP pressure change is 0.3 kPa (2.25 mmHg) or more	10 times or more in 10 seconds

(c) P0451: Pressure sensor stuck

EVAP pressure change during reference pressure measurement	Less than 0.65 kPa (4.876 mmHg)

(d) P0452: Pressure sensor low voltage

EVAP pressure	Less than 42.11 kPa (316 mmHg)

(e) P0453: Pressure sensor high voltage

EVAP pressure	More than 123.761 kPa (928 mmHg)

WIRING DIAGRAM

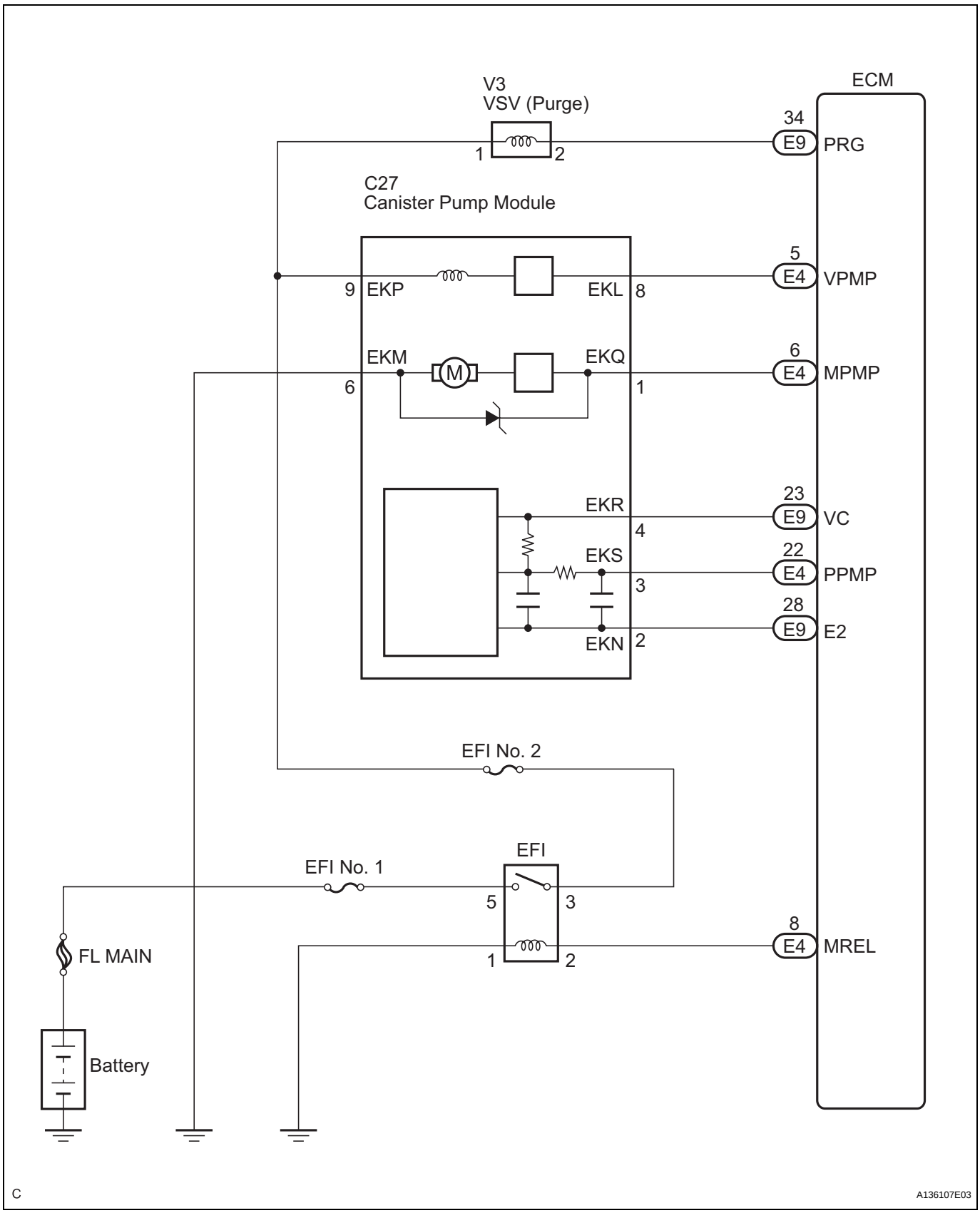

INSPECTION PROCEDURE

NOTICE:

- **When a vehicle is brought into the workshop, leave it as it is. Do not change the vehicle condition. For example, do not tighten the fuel cap.**
- **Do not disassemble the canister pump module.**
- **The intelligent tester is required to conduct the following diagnostic troubleshooting procedure.**

1	CONFIRM DTC AND EVAP PRESSURE

(a) Connect the intelligent tester to the DLC3.
(b) Turn the ignition switch to the ON position (do not start the engine).
(c) Turn the tester on.
(d) Select the following menu items: DIAGNOSIS / ENHANCED OBD II / DTC INFO / CURRENT CODES.
(e) Read DTCs.
(f) Select the following menu items: DIAGNOSIS / ENHANCED OBD II / DATA LIST / EVAP / EVAP VAPOR PRESS.
(g) Read the EVAP (Evaporative Emission) pressure displayed on the tester.

Result

Display (DTC Output)	Test Result	Suspected Trouble Area	Proceed to
P0451	-	Canister pressure sensor	C
P0452	Less than 45 kPa-a (336 mmHg-a)	• Wire harness/connector (ECM - Canister pressure sensor) • Canister pressure sensor • Short in ECM circuit	A
P0453	More than 120 kPa-a (900 mmHg-a)	• Wire harness/connector (ECM - Canister pressure sensor) • Canister pressure sensor • Open in ECM circuit	B

B → Go to step 4

C → GO TO EVAP SYSTEM

A

2	CHECK HARNESS AND CONNECTOR (CANISTER PUMP MODULE - ECM)

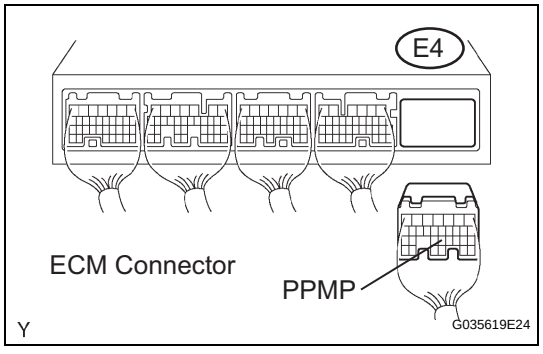

(a) Turn the ignition switch off.
(b) Disconnect the E4 ECM connector.
(c) Measure the resistance between the PPMP terminal of the ECM connector and the body ground.

Result

Test Result	Suspected Trouble Area	Proceed to
10 Ω or less	• Wire harness/connector (ECM - Canister pressure sensor) • Short in canister pressure sensor circuit	A
10 kΩ or more	• Wire harness/connector (ECM - Canister pressure sensor) • Short in ECM circuit	B

(d) Reconnect the ECM connector.

B	Go to step 7

A

ES

3	CHECK HARNESS AND CONNECTOR (CANISTER PUMP MODULE - ECM)

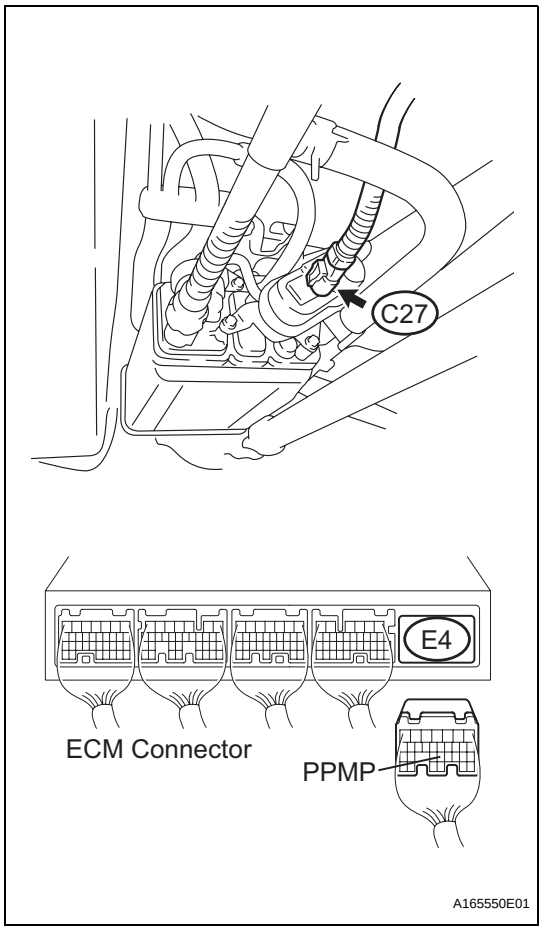

(a) Disconnect the C27 canister pump module connector.
(b) Disconnect the E4 ECM connector.
(c) Measure the resistance between the PPMP terminal of the ECM connector and the body ground.

Result

Test Result	Suspected Trouble Area	Proceed to
10 kΩ or more	Short in canister pressure sensor circuit	A
10 Ω or less	Short in wire harness/connector (ECM - Canister pressure sensor)	B

(d) Reconnect the canister pump module connector.
(e) Reconnect the ECM connector.

A	Go to step 5

B	Go to step 6

4 CHECK HARNESS AND CONNECTOR (CANISTER PUMP MODULE - ECM)

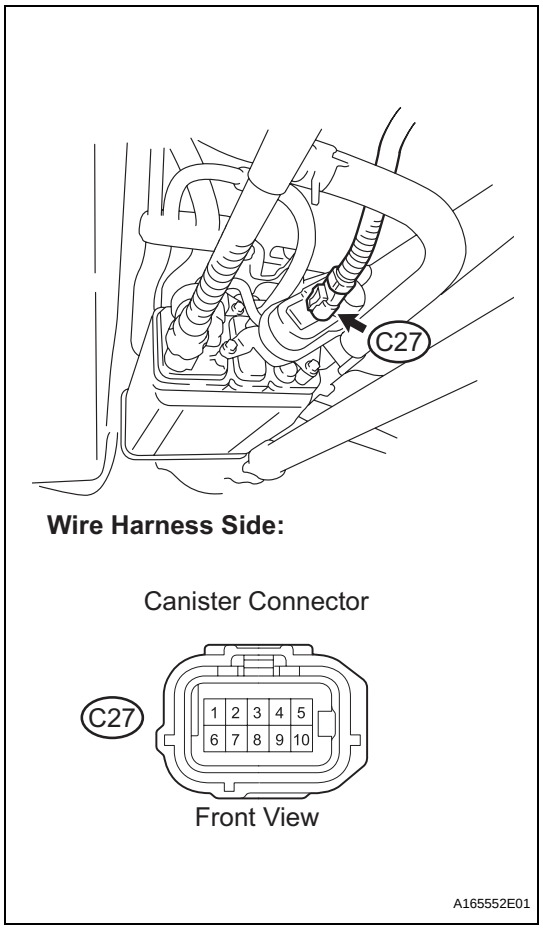

(a) Disconnect the C27 canister pump module connector.
(b) Turn the ignition switch to the ON position.
(c) Measure the voltage and resistance of the canister connector.

Standard

Tester Connection	Specified Condition
C27-4 - Body ground	4.5 to 5.5 V
C27-3 - Body ground	4.5 to 5.5 V
C27-2 - Body ground	100 Ω or less

ES

Result

Test Result	Suspected Trouble Area	Proceed to
Voltage and resistance within standard ranges	Open in canister pressure sensor circuit	A
Voltage and resistance outside standard ranges	Open in wire harness/connector (ECM - Canister pressure sensor)	B

(d) Reconnect the canister pump module connector.

A	Go to step 5
B	Go to step 6

5 REPLACE CHARCOAL CANISTER ASSEMBLY

(a) Replace the canister assembly (See page EC-8).

NOTICE:
When replacing the canister, check the canister pump module interior and related pipes for water, fuel and other liquids. If liquids are present, check for disconnections and/or cracks in the following: 1) the pipe from the air inlet port to the canister pump module; 2) the canister filter; and 3) the fuel tank vent hose.

ES

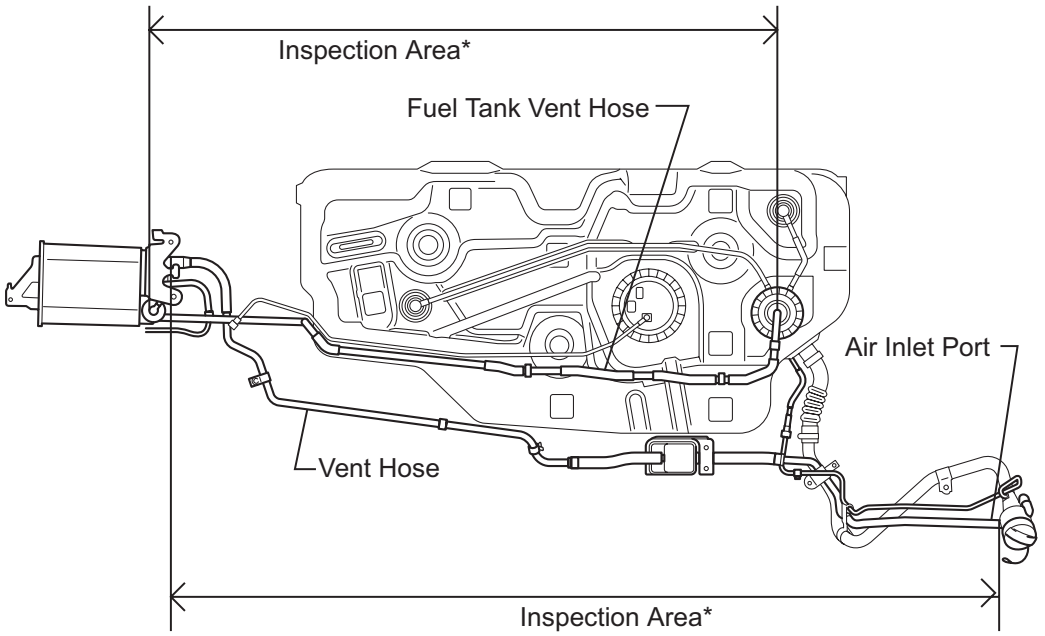

*: Check for Disconnection and/or cracks

N

A163294E01

NEXT | Go to step 8

6	REPAIR OR REPLACE HARNESS OR CONNECTOR (CANISTER PUMP MODULE - ECM)

HINT:
If the exhaust tailpipe has been removed, go to the next step before reinstalling it.

NEXT | Go to step 8

7	REPLACE ECM

(a) Replace the ECM (See page ES-498).

NEXT | Go to step 8

8	CHECK WHETHER DTC OUTPUT RECURS (AFTER REPAIR)

(a) Connect the intelligent tester to the DLC3.
(b) Turn the ignition switch to the ON position and turn the tester on.
(c) Wait for at least 60 seconds.
(d) On the tester, select the following menu items: DIAGNOSIS / ENHANCED OBD II / DTC INFO / PENDING CODES.
HINT:
If no pending DTCs are displayed on the tester, the repair has been successfully completed.

NEXT

COMPLETED