DTC	P0455	Evaporative Emission Control System Leak Detected (Gross Leak)

DTC	P0456	Evaporative Emission Control System Leak Detected (Very Small Leak)

DTC SUMMARY

DTCs	Monitoring Item	Malfunction Detection Condition	Trouble Area	Detection Timing	Detection Logic
P0455	EVAP gross leak	Vacuum pump creates negative pressure (vacuum) in EVAP system and EVAP system pressure is measured. 0.02 inch leak pressure standard is measured at start and end of leak check. If stabilized pressure is higher than [second 0.02 inch leak pressure standard x 0.2], ECM determines that EVAP system has a large leak.	• Fuel tank cap (loose) • Leakage from EVAP line (Canister - Fuel tank) • Leakage from EVAP line (Purge VSV - Canister) • Leakage from pump module • Leakage from fuel tank • Leakage from canister	While ignition switch OFF	2 trip
P0456	EVAP small leak	Vacuum pump creates negative pressure (vacuum) in EVAP system and EVAP system pressure is measured. 0.02 inch leak pressure standard measured at start and end of leak check. If stabilized pressure is higher than second 0.02 inch leak pressure standard, ECM determines that EVAP system has a small leak.		While ignition switch OFF	2 trip

DESCRIPTION

The circuit description can be found in the EVAP (Evaporative Emission) System (See page ES-409).

INSPECTION PROCEDURE

Refer to the EVAP System (See page ES-412).

MONITOR DESCRIPTION

5 hours*1 after the ignition switch is turned off, the electric vacuum pump creates negative pressure (vacuum) in the EVAP (Evaporative Emission) system. The ECM monitors for leaks and actuator malfunctions based on the EVAP pressure.

HINT:

*1: If the engine coolant temperature is not below 35°C (95°F) 5 hours after the ignition switch is turned off, the monitor check starts 2 hours later. If it is still not below 35°C (95°F) 7 hours after the ignition switch is turned off, the monitor check starts 2.5 hours later.

Sequence	Operation	Description	Duration
-	ECM activation	Activated by soak timer, 5 hours (7 or 9.5 hours) after ignition switch is turned off.	-
A	Atmospheric pressure measurement	Vent valve is turned OFF (vent) and EVAP system pressure is measured by ECM in order to register atmospheric pressure. If pressure in EVAP system is not between 70 kPa and 110 kPa (525 mmHg and 825 mmHg), ECM cancels EVAP system monitor.	10 seconds

Sequence	Operation	Description	Duration
B	First 0.02 inch leak pressure measurement	In order to determine 0.02 inch leak pressure standard, vacuum pump creates negative pressure (vacuum) through 0.02 inch orifice and then ECM checks if vacuum pump and vent valve operate normally.	60 seconds
C	EVAP system pressure measurement	Vent valve is turned ON (closed) to shut EVAP system. Negative pressure (vacuum) is created in EVAP system, and EVAP system pressure is then measured. Write down measured value as it will be used in leak check. If EVAP pressure does not stabilize within 15 minutes, ECM cancels EVAP system monitor.	15 minutes*2
D	Purge VSV monitor	Purge VSV is opened and then EVAP system pressure is measured by ECM. Large increase indicates normal.	10 seconds
E	Second 0.02 inch leak pressure measurement	After second 0.02 inch leak pressure measurement, leak check is performed by comparing first and second 0.02 inch leak pressure standards. If stabilized system pressure is higher than second 0.02 inch leak pressure standard, ECM determines that EVAP system is leaking.	60 seconds
F	Final check	Atmospheric pressure is measured and then monitoring result is recorded by ECM.	-

*2: If only a small amount of fuel is in the fuel tank, it takes longer for the EVAP pressure to stabilize.

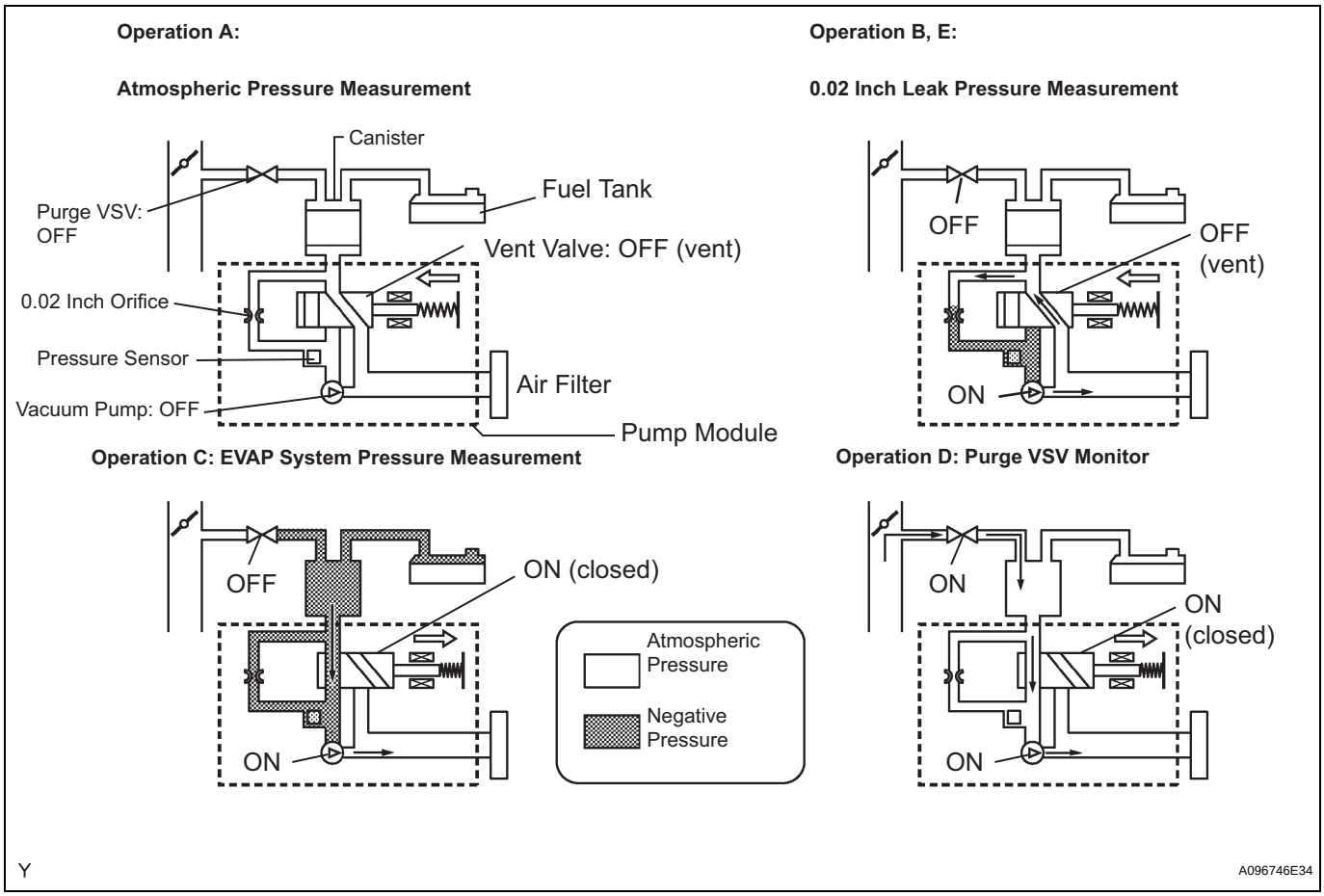

1. P0455: EVAP (Evaporative Emission) gross leak
   In operation C, the vacuum pump creates negative pressure (vacuum) in the EVAP system and the EVAP system pressure is measured. If the stabilized system pressure is higher than [second 0.02 inch leak pressure standard x 0.2] (near atmospheric pressure), the ECM determines that the EVAP system has a large leak, illuminates the MIL and sets the DTC (2 trip detection logic).

2. P0456: EVAP very small leak
In operation C, the vacuum pump creates negative pressure (vacuum) in the EVAP system and the EVAP system pressure is measured. If the stabilized system pressure is higher than second 0.02 inch leak pressure standard, the ECM determines that the EVAP system has a small leak, illuminates the MIL and sets the DTC (2 trip detection logic).

EVAP Pressure when EVAP System Leaks:

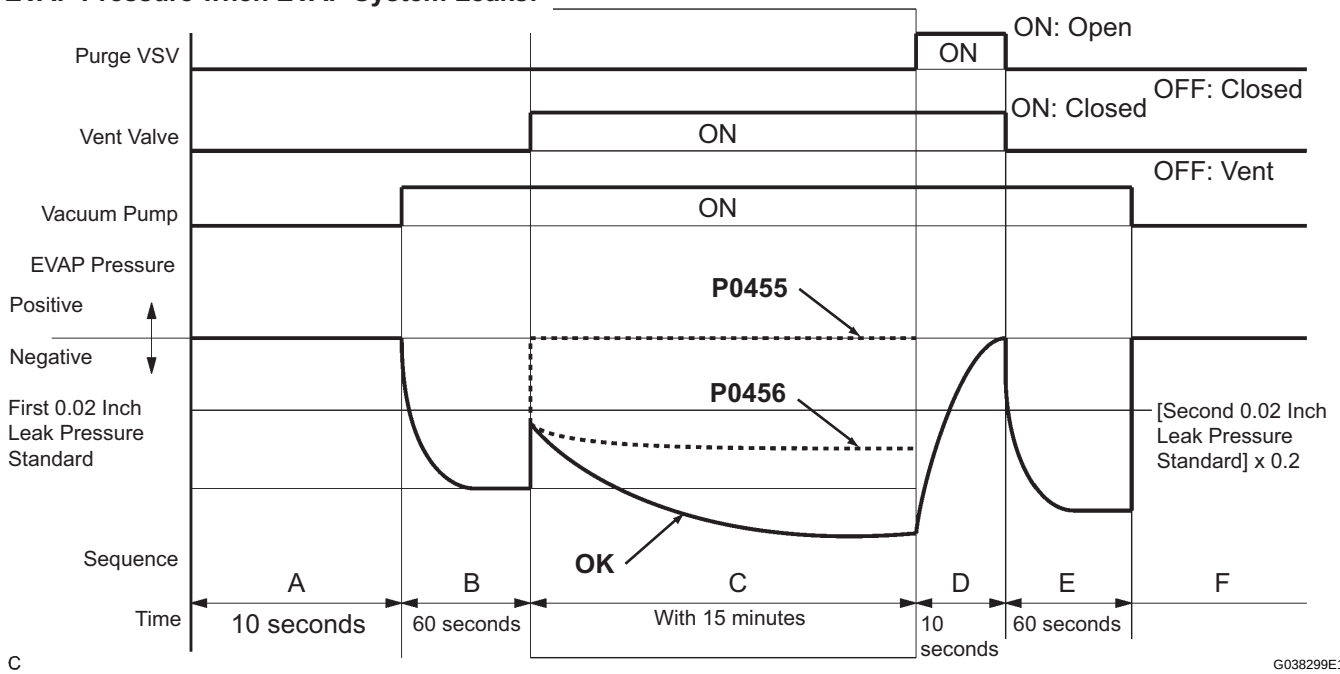

MONITOR STRATEGY

Related DTCs	P0455: Gross leak detected P0456: Very small leak (0.020 inch hole) detected
Required Sensors / Components	Purge VSV and pump module
Frequency of Operation	Once per driving cycle
Duration	Within 15 minutes
MIL Operation	2 driving cycles
Sequence of Operation	None

TYPICAL ENABLING CONDITIONS

The monitor will run whenever these DTCs are not present	None
Atmospheric pressure	70 to 110 kPa (525 to 825 mmHg)
Battery voltage	10.5 V or more
Vehicle speed	Less than 2.5 mph (4 km/h)
Ignition switch	OFF
Time after key-off	5 or 7 or 9.5 hours
EVAP pressure sensor malfunction (P0450, P0452, P0453)	Not detected
EVAP canister purge valve	Not operated by scan tool
EVAP canister vent valve	Not operated by scan tool
EVAP leak detection pump	Not operated by scan tool
Both of the following conditions 1 and 2 are met before key-off	-
1. Duration that vehicle driven	5 minutes or more

2. EVAP purge operation	Performed
ECT	4.4 to 35°C (40 to 95°F)
IAT	4.4 to 35°C (40 to 95°F)

Key-off monitor sequence 1 to 8

1. Atmospheric pressure measurement

Next sequence is run if the following condition is met	-
Atmospheric pressure change	Less than 0.3 kPa (2.25 mmHg) in 1 second

2. First reference pressure measurement

Next sequence is run if the following conditions are met	Conditions 1, 2 and 3
1. EVAP pressure just after reference pressure measurement	-1 kPa (-7.5 mmHg) or less
2. Reference pressure	-4.85 to -1.057 kPa (-36.384 to -7.929 mmHg)
3. Reference pressure	Saturated within 1 minutes

3. EVAP canister vent valve close stuck check

Next sequence is run if the following condition is met	-
EVAP pressure change after vent valve is ON	0.3 kPa (2.25 mmHg) or more

4. Vacuum introduction

Next sequence is run if the following condition is met	-
EVAP pressure	Saturated within 15 minutes

5. EVAP canister purge valve close stuck check

Next sequence is run if the following condition is met	-
EVAP pressure change after purge valve is open	0.3 kPa (2.25 mmHg) or more

6. Second reference pressure measurement

Next sequence is run if the following conditions are met	Conditions 1, 2, 3 and 4
1. EVAP pressure just after reference pressure measurement	-1 kPa (-7.5 mmHg) or less
2. Reference pressure	-4.85 to -1.057 kPa (-36.384 to -7.929 mmHg)
3. Reference pressure	Saturated
4. Difference between first reference pressure and second reference pressure	Less than 0.7 kPa (5.25 mmHg)

7. Leak check

Next sequence is run if the following condition is met	-
EVAP pressure when vacuum introduction was complete	Lower than second reference pressure

8. Atmospheric pressure measurement

EVAP monitor is complete if the following condition was met	-
Atmospheric pressure difference between sequence 1 and 8	Within 0.3 kPa (2.25 mmHg)

TYPICAL MALFUNCTION THRESHOLDS

P0455: EVAP gross leak

EVAP pressure when vacuum introduction is complete	Between reference pressure and reference pressure x 0.2

P0456: EVAP 0.02 inch leak

EVAP pressure when vacuum introduction is complete	Higher than reference pressure x 0.2

MONITOR RESULT

Refer to CHECKING MONITOR STATUS (See page ES-19).

DTC	P0500	Vehicle Speed Sensor "A"

DESCRIPTION

The speed sensor detects the wheel speed and sends the appropriate signals to the skid control ECU. The skid control ECU converts these wheel speed signals into a 4-pulse signal and outputs it to the ECM via the combination meter. The ECM determines the vehicle speed based on the frequency of these pulse signals.

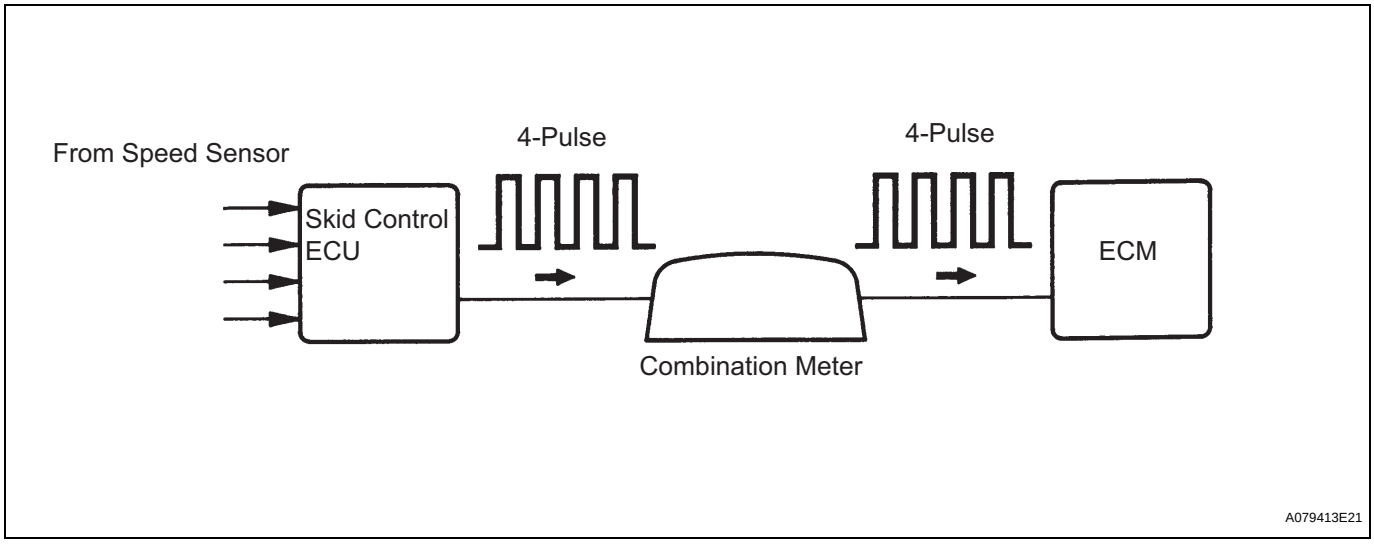

DTC No.	DTC Detection Condition	Trouble Area
P0500	The ECM detects the following conditions simultaneously for 2 seconds (1 trip detection logic): • No SPD (speed sensor) signal while ECM detects NC (transmission counter gear) signal is more than 300 rpm • Park / neutral position switch is OFF (When shift lever is in other than P and N positions)	• Open or short in speed sensor circuit • Speed sensor • Combination meter • ECM • Skid control ECU

MONITOR DESCRIPTION

The ECM assumes that the vehicle is being driven when the transmission counter gear indicates more than 300 rpm and over 30 seconds have passed since the park / neutral position switch was turned OFF. If thre is no signal from the vehicle speed sensor with these conditions satisfied, the ECM concludes that the vehicle speed sensor is malfunctioning. The ECM will turn on the MIL and a DTC will be set.

MONITOR STRATEGY

Related DTCs	P0500: Vehicle speed sensor "A" pulse input error
Required Sensors / Components (Main)	Vehicle Speed Sensor (VSS), Combination meter and Skid control ECU
Required Sensors / Components (Related)	Park/neutral Position (PNP) switch, Engine Coolant Temperature (ECT) sensor, Crankshaft Position (CKP) sensor and Mass Air Flow (MAF) meter
Frequency of Operation	Continuous
Duration	2 seconds
MIL Operation	Immediate
Sequence of Operation	None

TYPICAL ENABLING CONDITIONS

The monitor will run whenever these DTCs are not present	P0120, P0121, P0122, P0123, P0220, P0222, P0223, P2135 (TP)
Time after ignition switch OFF to ON	3 seconds or more

Engine	Running
Transmission counter gear speed	300 rpm or more
Battery voltage	8 V or more
Ignition switch	ON
Starter	OFF
Either of the following conditions is met	Condition 1 or 2
1. Both of the following conditions are met	Condition (a) or (b)
(a) ECT	20°C (68°F) or more
(b) ECT sensor fail	Not detected
(c) Time after PNP switch ON to OFF	10 seconds or more
2. Both of the following conditions are met	Conditions (a) and (b)
(a) ECT	Less than 20°C (68°F)
(b) ECT sensor fail	Detected
(c) Time after PNP switch ON to OFF	30 seconds or more

ES

TYPICAL MALFUNCTION THRESHOLDS

Vehicle speed sensor signal	No signal

WIRING DIAGRAM

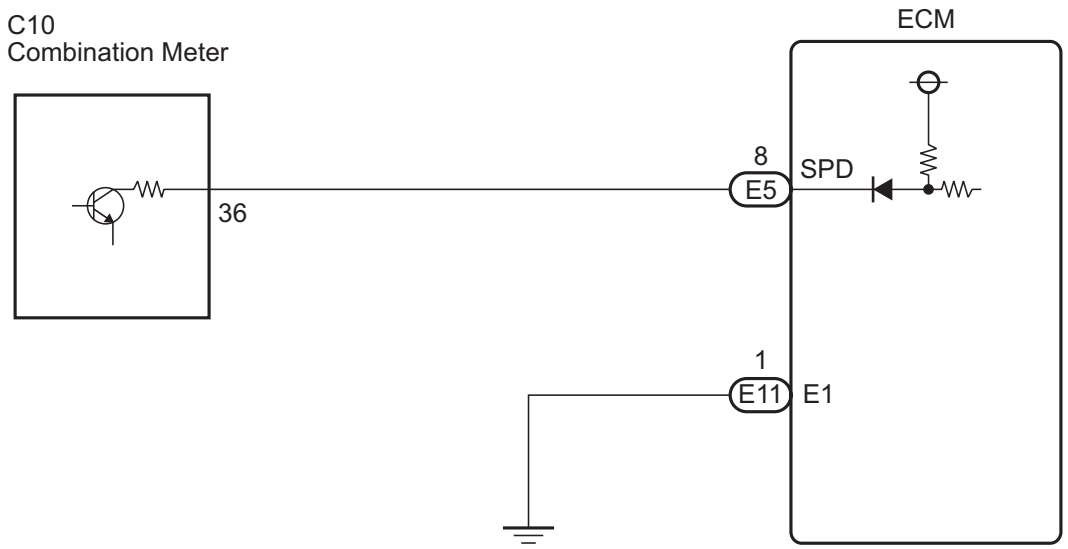

INSPECTION PROCEDURE

HINT:

Read freeze frame data using the intelligent tester. The ECM records vehicle and driving condition information as freeze frame data the moment a DTC is stored. When troubleshooting, freeze frame data can be helpful in determining whether the vehicle was running or stopped, whether the engine was warmed up or not, whether the air-fuel ratio was lean or rich, as well as other data recorded at the time of a malfunction.

1	CHECK SPEEDOMETER

(a) Drive the vehicle and check whether the operation of the speedometer in the combination meter is normal.
HINT:
- The vehicle speed sensor is operating normally if the speedometer reading is normal.
- If the speedometer does not operate, check it by following the procedure described in speedometer malfunction.

NG → **GO TO SPEEDOMETER CIRCUIT**

OK

2	READ VALUE OF INTELLIGENT TESTER (VEHICLE SPEED)

(a) Connect the intelligent tester to the DLC3.
(b) Turn the ignition switch to the ON position.
(c) Turn the tester on.
(d) Select the following menu items: DIAGNOSIS / ENHANCED OBD II / DATA LIST / PRIMARY / VEHICLE SPD.
(e) Drive the vehicle.
(f) Read the value displayed on the tester.
OK:
Vehicle speeds displayed on tester and speedometer display are equal.

NG → **CHECK FOR INTERMITTENT PROBLEMS**

OK

3	CHECK COMBINATION METER ASSEMBLY (+S VOLTAGE)

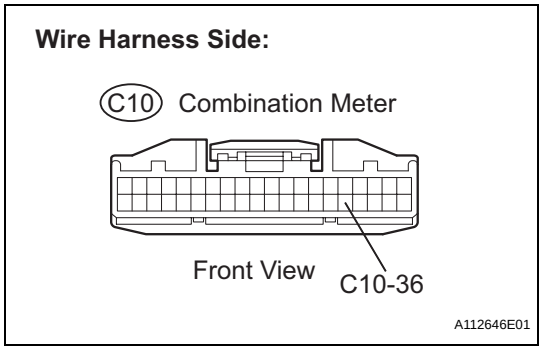

(a) Disconnect the C10 combination meter connector.
(b) Turn the ignition switch to the ON position.
(c) Measure the voltage between the terminal of the combination meter and body ground.
Standard voltage

Tester Connection	Specified Condition
C10-36 - Body ground	4.5 to 5.5 V

(d) Reconnect the combination meter connector.

NG → **Go to step 5**

OK

4	CHECK COMBINATION METER ASSEMBLY (SPD SIGNAL WAVEFORM)

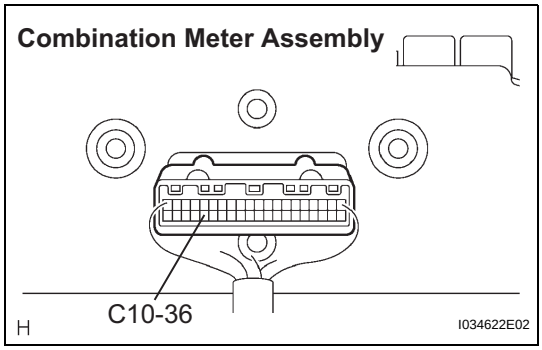

(a) Shift the transmission gear selector lever to the neutral position.
(b) Jack up the vehicle.
(c) Turn the ignition switch to the ON position.

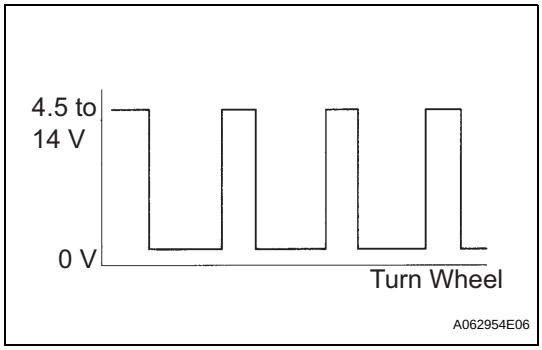

(d) Measure the voltage between the terminal of the combination meter and body ground while the wheel is turned slowly.
Standard voltage

Tester Connection	Specified Condition
C10-36 - Body ground	Voltage generated intermittently

HINT:
The output voltage should fluctuate up and down, similarly to the diagram, when the wheel is turned slowly.

NG → **REPLACE COMBINATION METER ASSEMBLY**

OK

5	CHECK HARNESS AND CONNECTOR (COMBINATION METER ASSEMBLY - ECM)

Wire Harness Side:

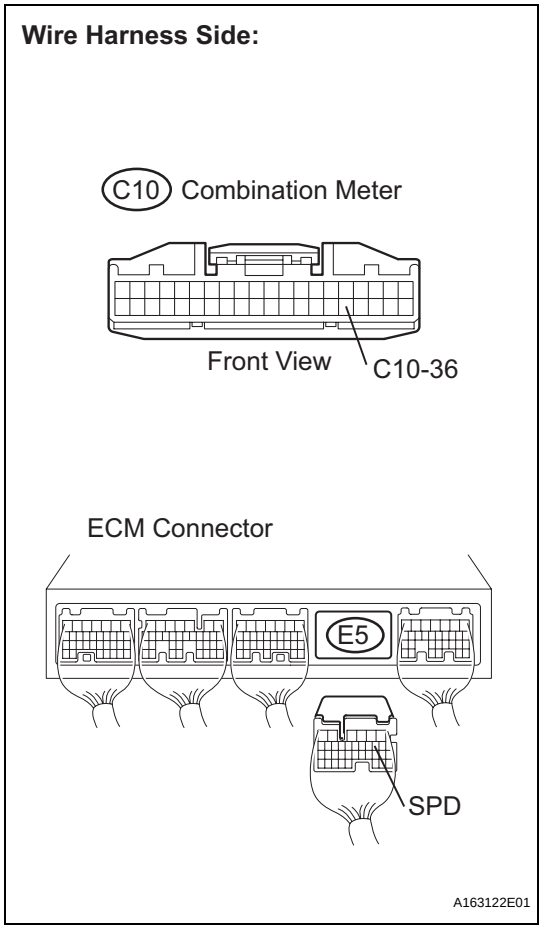

(a) Disconnect the C10 combination meter connector.
(b) Disconnect the E5 ECM connector.
(c) Measure the resistance.

Standard resistance (Check for open)

Tester Connection	Specified Condition
C10-36 - SPD (E5-8)	Below 1 Ω

Standard resistance (Check for short)

Tester Connection	Specified Condition
C10-36 or SPD (E5-8) - Body ground	10 kΩ or higher

(d) Reconnect the combination meter connector.
(e) Reconnect the ECM connector.

NG → **REPAIR OR REPLACE HARNESS OR CONNECTOR (COMBINATION METER ASSEMBLY - ECM)**

OK

REPLACE ECM (See page ES-498)

ES