DTC	P0617	Starter Relay Circuit High

MONITOR DESCRIPTION

While the engine is being cranked, the positive battery voltage is applied to terminal STA of the ECM. If the ECM detects the Starter Control (STA) signal while the vehicle is being driven, it determines that there is a malfunction in the STA circuit. The ECM then illuminates the MIL and sets the DTC.
This monitor runs when the vehicle is driven at 12.4 mph (20 km/h) for over 20 seconds.

DTC No.	DTC Detection Condition	Trouble Area
P0617	When conditions (a), (b) and (c) are met, positive (+B) battery voltage 10.5 V or more is applied to ECM for 20 seconds (1 trip detection logic): (a) Vehicle speed more than 12.4 mph (20 km/h) (b) Engine speed more than 1000 rpm (c) STA signal ON	• Park/Neutral Position (PNP) switch • Starter relay circuit • Ignition switch • ECM

ES

MONITOR STRATEGY

Related DTCs	P0617: Starter signal
Required Sensors / Components (Main)	STARTER relay, PNP switch, Clutch start switch and Ignition switch
Required Sensors / Components (Related)	Vehicle Speed Sensor (VSS), Crankshaft Position (CKP) sensor
Frequency of Operation	Continuous
Duration	20 seconds
MIL Operation	Immediate
Sequence of Operation	None

TYPICAL ENABLING CONDITIONS

The monitor will run whenever these DTCs are not present	None
Battery voltage	10.5 V or more
Vehicle speed	12.43 mph (20 km/h) or more
Engine speed	1000 rpm or more

TYPICAL MALFUNCTION THRESHOLDS

Starter signal	ON

WIRING DIAGRAM

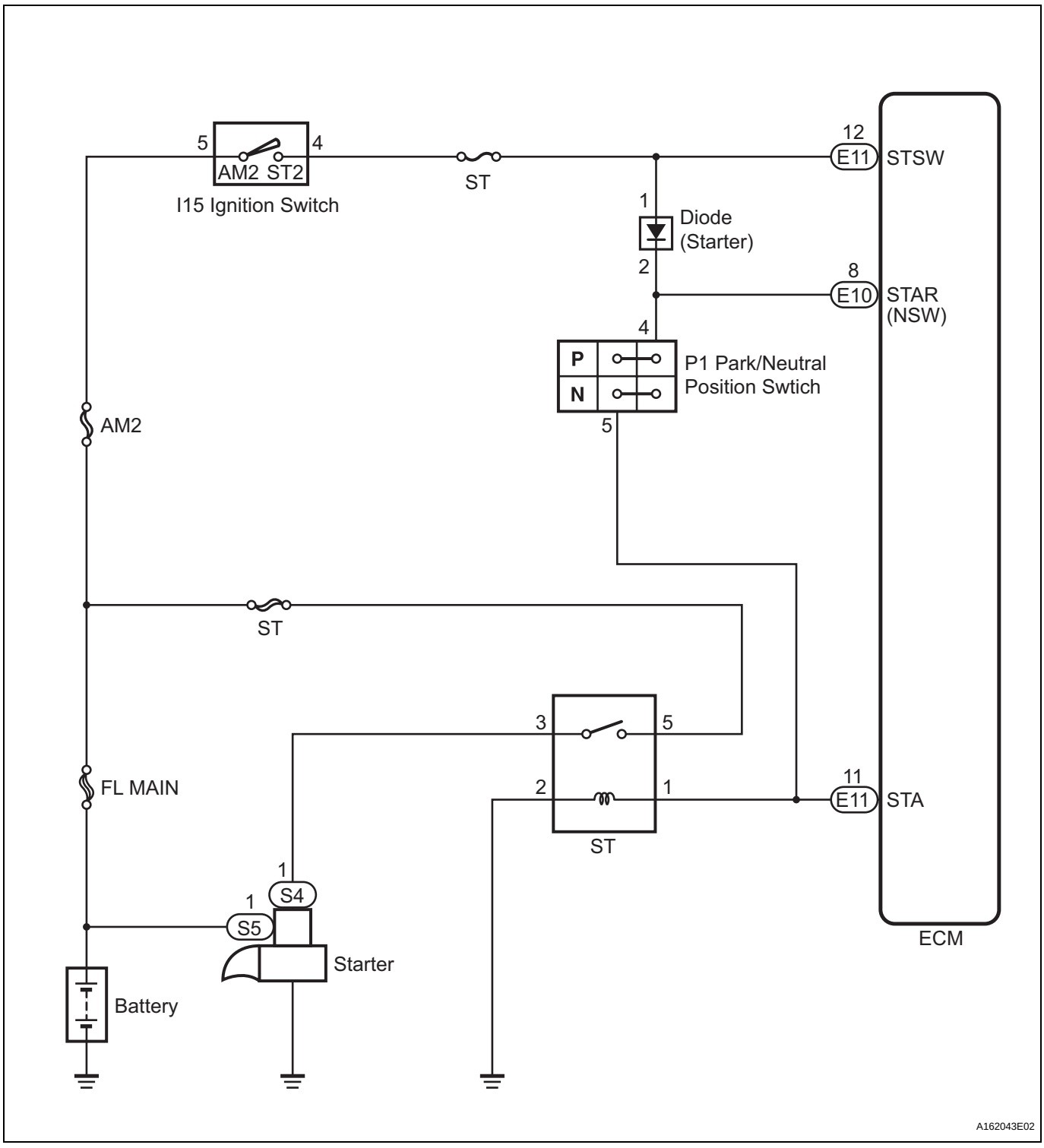

INSPECTION PROCEDURE

HINT:

- The following troubleshooting flowchart is based on the premise that the engine is cranked normally. If the engine will not crank, proceed to the problem symptoms table (See page ES-27).

- Read freeze frame data using the intelligent tester. The ECM records vehicle and driving condition information as freeze frame data the moment a DTC is stored. When troubleshooting, freeze frame data can be helpful in determining whether the vehicle was running or stopped, whether the engine was warmed up or not, whether the air-fuel ratio was lean or rich, as well as other data recorded at the time of a malfunction.

1 READ VALUE OF INTELLIGENT TESTER (STARTER SIGNAL)

(a) Connect the intelligent tester to the DLC3.
(b) Turn the ignition switch to the ON position and turn the tester on.
(c) Select the following menu items: DIAGNOSIS / ENHANCED OBD II / DATA LIST / ALL / STARTER SIG.
(d) Check the value displayed on the tester when the ignition switch is turned to the ON position and START position.

OK

Ignition Switch Positions	STARTER SIG
ON	OFF
START	ON

OK → **CHECK FOR INTERMITTENT PROBLEMS**

NG

2 INSPECT PARK/NEUTRAL POSITION SWITCH

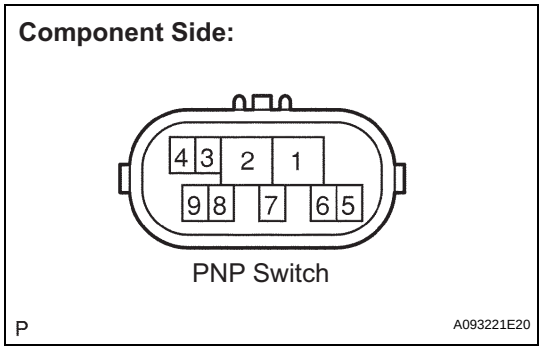

(a) Inspect the Park/Neutral Position (PNP) switch.
(1) Disconnect the P1 PNP switch connector.
(2) Measure the resistance according to the value(s) in the table below.

Standard resistance

Shift Position	Tester Connection	Specified Condition
P	2 - 6, 4 - 5	Below 1 Ω
R	1 - 2	Below 1 Ω
N	2 - 9, 4 - 5	Below 1 Ω
D	2 - 7	Below 1 Ω
2	2 - 3	Below 1 Ω
L	2 - 8	Below 1 Ω

(3) Reconnect the PNP switch connector.

NG → **REPLACE PARK/NEUTRAL POSITION SWITCH (See page AX-125)**

OK

3 READ VALUE OF INTELLIGENT TESTER (STARTER SIGNAL)

(a) Connect the intelligent tester to the DLC3.
(b) Turn the ignition switch to the ON position and turn the tester on.

(c) Select the following menu items: DIAGNOSIS / ENHANCED OBD II / DATA LIST / ALL / STARTER SIG.
(d) Check the value displayed on the tester when the ignition switch is turned to the ON position and the START position.

OK

Ignition Switch Positions	STARTER SIG
ON	OFF
START	ON

OK → **SYSTEM OK**

NG

4 INSPECT IGNITION SWITCH ASSEMBLY

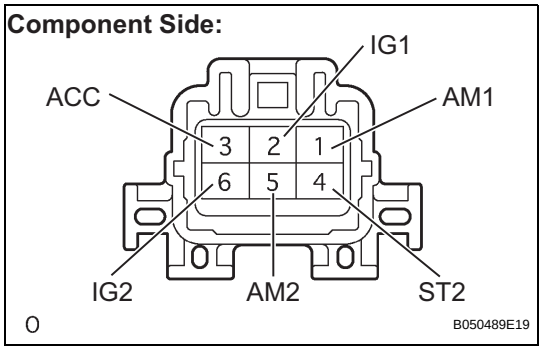

(a) Disconnect the I15 ignition switch connector.
(b) Measure the resistance according to the value(s) in the table below.

Standard resistance

Switch Condition	Terminal No.	Specified Condition
LOCK	All Terminals	10 kΩ or higher
ACC	1 - 3	Below 1 Ω
ON	1 - 2, 1 - 3, 2 - 3, 5 - 6	
START	4 - 5, 4 - 6, 5 - 6, 1 - 2	

(c) Reconnect the ignition switch connector.

NG → **REPLACE IGNITION SWITCH ASSEMBLY (GO TO NEXT STEP 5 AFTER REPLACEMENT) (See page ST-16)**

OK

5 READ VALUE OF INTELLIGENT TESTER (STARTER SIGNAL)

(a) Connect the intelligent tester to the DLC3.
(b) Turn the ignition switch to the ON position and turn the tester on.
(c) Select the following menu items: DIAGNOSIS / ENHANCED OBD II / DATA LIST / PRIMARY / STARTER SIG.
(d) Check the value displayed on the tester when the ignition switch is turned to the ON position and the START position.

OK

Ignition Switch Positions	STARTER SIG
ON	OFF
START	ON

OK → **SYSTEM OK**

NG

REPAIR OR REPLACE HARNESS OR CONNECTOR (PNP SWITCH - STA TERMINAL OF ECM)