DTC	P2118	Throttle Actuator Control Motor Current Range / Performance

DESCRIPTION

The ETCS (Electronic Throttle Control System) has a dedicated power supply circuit. The voltage (+BM) is monitored and when it is low (less than 4 V), the ECM determines that there is a malfunction in the ETCS and cuts off the current to the throttle actuator.
When the voltage becomes unstable, the ETCS itself becomes unstable. For this reason, when the voltage is low, the current to the throttle actuator is cut. If repairs are made and the system returns to normal, turn the ignition switch off. The ECM then allows the current to flow to the throttle actuator so that it can be restarted.

ES

HINT:
The ETCS does not use a throttle cable.

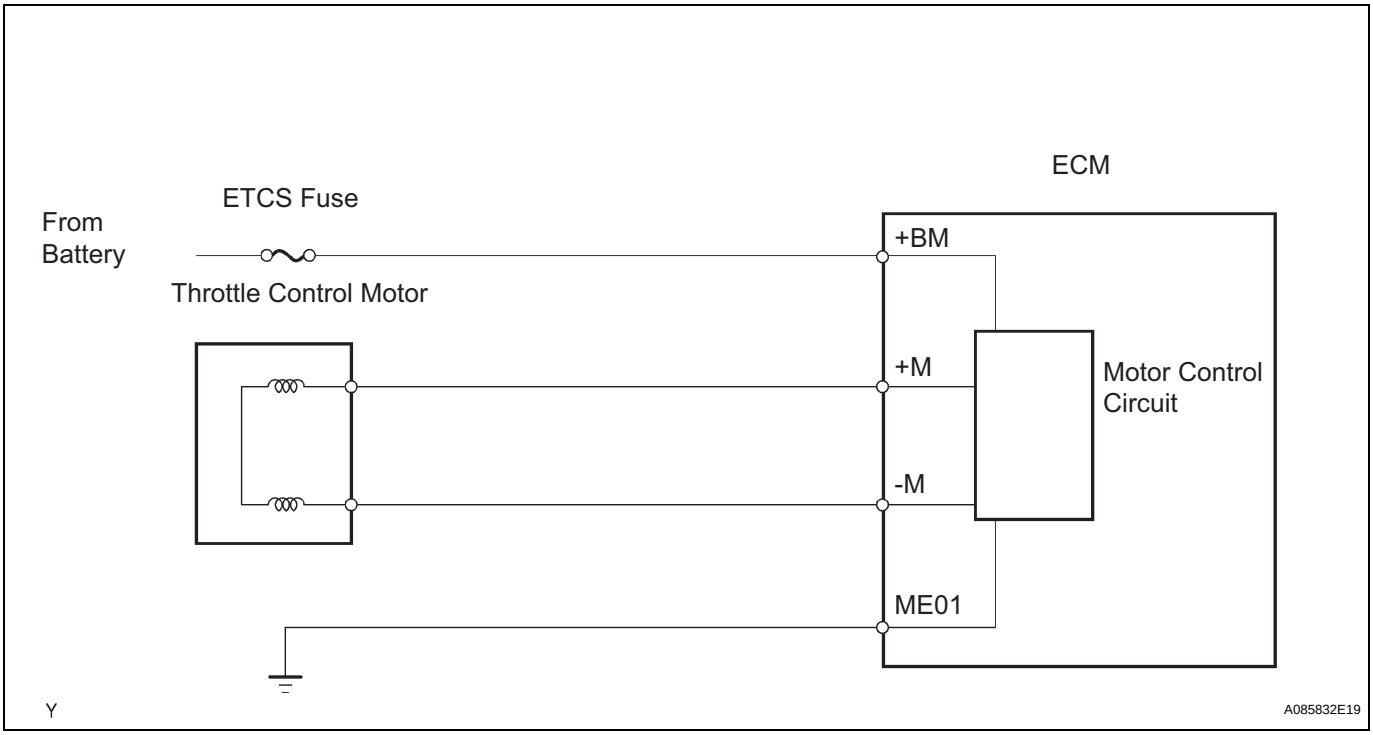

DTC No.	DTC Detection Condition	Trouble Area
P2118	Open in ETCS power source (+BM) circuit (1 trip detection logic)	• Open in ETCS power source circuit • ETCS fuse • ECM

MONITOR DESCRIPTION

The ECM monitors the battery supply voltage applied to the throttle actuator.
When the power supply voltage (+BM) drops below 4 V for 0.8 seconds or more, the ECM interprets this as an open in the power supply circuit (+BM). The ECM illuminates the MIL and sets the DTC.
If the malfunction is not repaired successfully, the DTC is set 5 seconds after the engine is next started.

MONITOR STRATEGY

Related DTCs	P2118: Throttle actuator power supply
Required Sensors / Components (Main)	Throttle actuator, throttle valve, ETCS fuse
Required Sensors / Components (Related)	None
Frequency of Operation	Continuous
Duration	0.8 seconds

MIL Operation	Immediate
Sequence of Operation	None

TYPICAL ENABLING CONDITIONS

The monitor will run whenever these DTCs are not present	None
Battery voltage	8 V or more
Throttle actuator power	ON

TYPICAL MALFUNCTION THRESHOLDS

Throttle actuator power supply voltage (+BM)	Less than 4 V

COMPONENT OPERATING RANGE

Throttle actuator power supply voltage	9 to 14 V

FAIL-SAFE

When this DTC, as well as other DTCs relating to ETCS (Electronic Throttle Control System) malfunctions, is set, the ECM enters fail-safe mode. During fail-safe mode, the ECM cuts the current to the throttle actuator off, and the throttle valve is returned to a 6° throttle angle by the return spring. The ECM then adjusts the engine output by controlling the fuel injection (intermittent fuel-cut) and ignition timing, in accordance with the accelerator pedal opening angle, to allow the vehicle to continue at a minimal speed. If the accelerator pedal is depressed gently, the vehicle can be driven slowly.
Fail-safe mode continues until a pass condition is detected, and the ignition switch is then turned off.

WIRING DIAGRAM

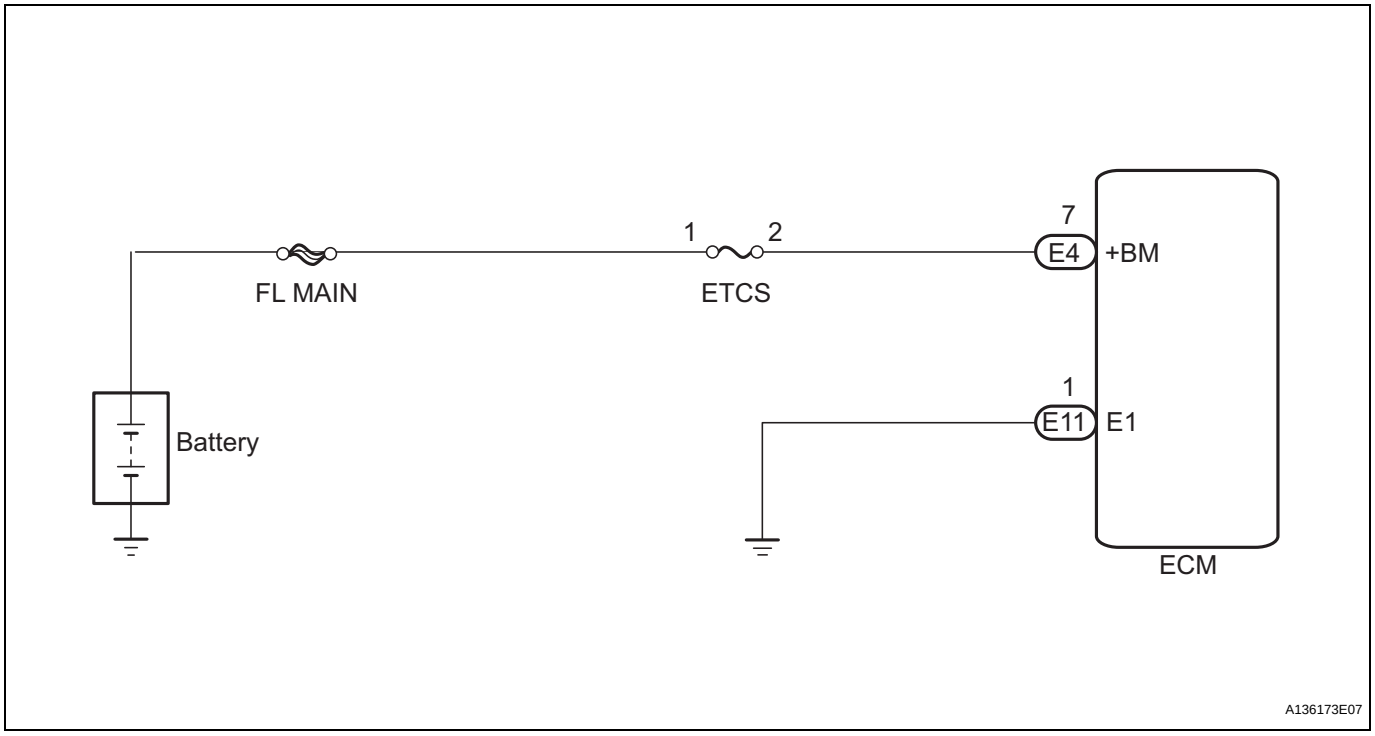

INSPECTION PROCEDURE

HINT:
Read freeze frame data using the intelligent tester. The ECM records vehicle and driving condition information as freeze frame data the moment a DTC is stored. When troubleshooting, freeze frame data can be helpful in determining whether the vehicle was running or stopped, whether the engine was warmed up or not, whether the air-fuel ratio was lean or rich, as well as other data recorded at the time of a malfunction.

1 CHECK FUSE (ETCS FUSE)

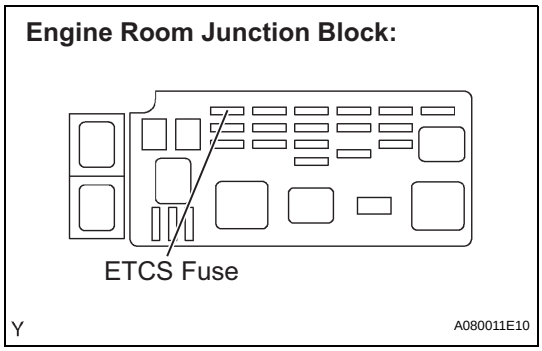

(a) Remove the ETCS fuse from the engine room junction block.
(b) Measure the resistance according to the value(s) in the table below.
Standard resistance:
Below 1 Ω
(c) Reinstall the ETCS fuse.

NG → **REPLACE FUSE (ETCS FUSE)**

OK

2 INSPECT ECM (+BM VOLTAGE)

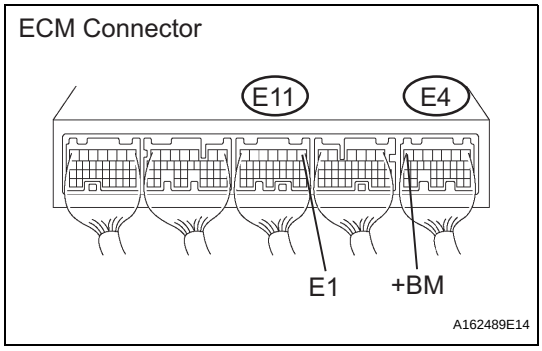

(a) Measure the voltage according to the value(s) in the table below.
Standard voltage

Tester Connection	Specified Condition
+BM (E4-7) - E1 (E11-1)	9 to 14 V

OK → **CHECK FOR INTERMITTENT PROBLEMS**

NG

3 CHECK HARNESS AND CONNECTOR (ECM - ETCS FUSE)

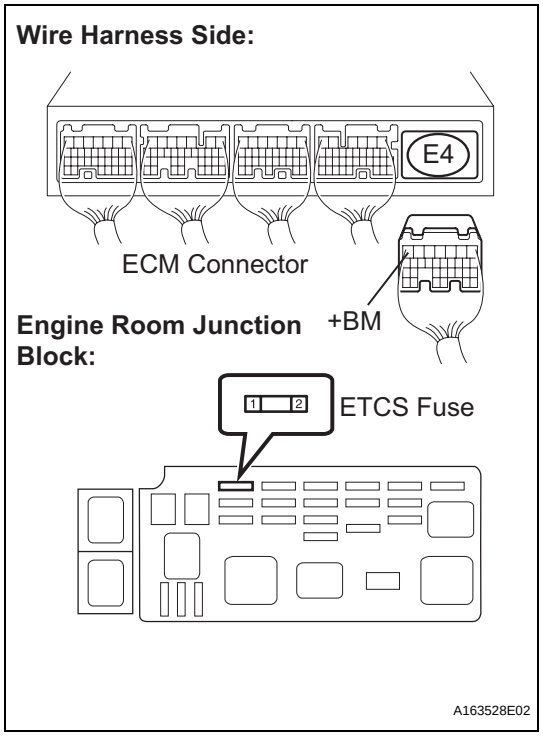

(a) Check the harness and connector between the ETCS fuse and ECM.
(1) Remove the ETCS fuse from the engine room junction block.
(2) Disconnect the E4 ECM connector.
(3) Measure the resistance according to the value(s) in the table below.

Standard resistance:

Check for open

Tester Connection	Specified Condition
ETCS fuse (2) - +BM (E4-7)	Below 1 Ω

Check for short

Tester Connection	Specified Condition
ETCS fuse (2) or +BM (E4-7) - Body ground	10 kΩ or higher

(4) Reconnect the ECM connector.

NG → **REPAIR OR REPLACE HARNESS OR CONNECTOR (ECM - ETCS FUSE)**

OK

4 CHECK HARNESS AND CONNECTOR (ETCS FUSE - BATTERY)

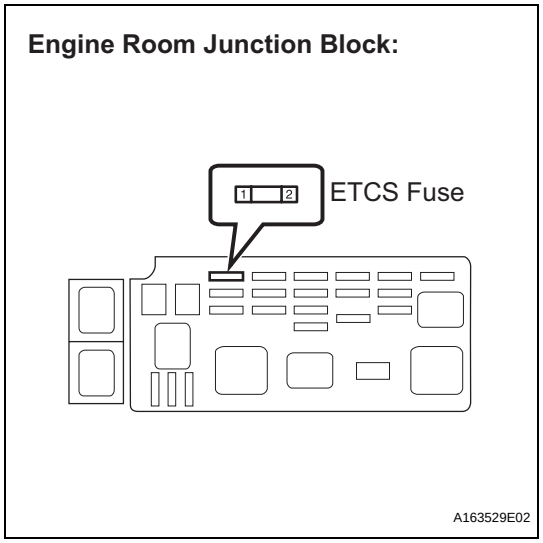

(a) Check the harness and connector between the ETCS fuse and positive battery cable.
(1) Disconnect the negative battery cable.
(2) Measure the resistance according to the value(s) in the table below.

Standard resistance:

Check for open

Tester Connection	Specified Condition
Positive battery cable - ETCS fuse (1)	Below 1 Ω

Check for short

Tester Connection	Specified Condition
Positive battery cable or ETCS fuse (1) - Body ground	10 kΩ or higher

(3) Reinstall the ETCS fuse.
(4) Reconnect the negative battery cable.

NG → **REPAIR OR REPLACE HARNESS OR CONNECTOR (ETCS FUSE - BATTERY)**

OK

REPLACE ECM (See page ES-498)