DTC	P2120	Throttle / Pedal Position Sensor / Switch "D" Circuit
DTC	P2122	Throttle / Pedal Position Sensor / Switch "D" Circuit Low Input
DTC	P2123	Throttle / Pedal Position Sensor / Switch "D" Circuit High Input
DTC	P2125	Throttle / Pedal Position Sensor / Switch "E" Circuit
DTC	P2127	Throttle / Pedal Position Sensor / Switch "E" Circuit Low Input
DTC	P2128	Throttle / Pedal Position Sensor / Switch "E" Circuit High Input
DTC	P2138	Throttle / Pedal Position Sensor / Switch "D" / "E" Voltage Correlation

HINT:
These DTCs relate to the Accelerator Pedal Position (APP) sensor.

DESCRIPTION

HINT:
This ETCS (Electronic Throttle Control System) does not use a throttle cable.
The Accelerator Pedal Position (APP) sensor is integrated with the accelerator pedal bracket and has 2 sensor circuits: VPA (main) and VPA2 (sub). This sensor is a non-contact type, and uses Hall-effect elements, in order to yield accurate signals, even in extreme driving conditions, such as at high speeds as well as very low speeds. The voltage, which is applied to terminals VPA and VPA2 of the ECM, varies between 0 V and 5 V in proportion to the operating angle of the accelerator pedal (throttle valve). A signal from VPA indicates the actual accelerator pedal opening angle (throttle valve opening angle) and is used for engine control. A signal from VPA2 conveys the status of the VPA circuit and is used to check the APP sensor itself.
The ECM monitors the actual accelerator pedal opening angle (throttle valve opening angle) through the signals from VPA and VPA2, and controls the throttle actuator according to these signals.

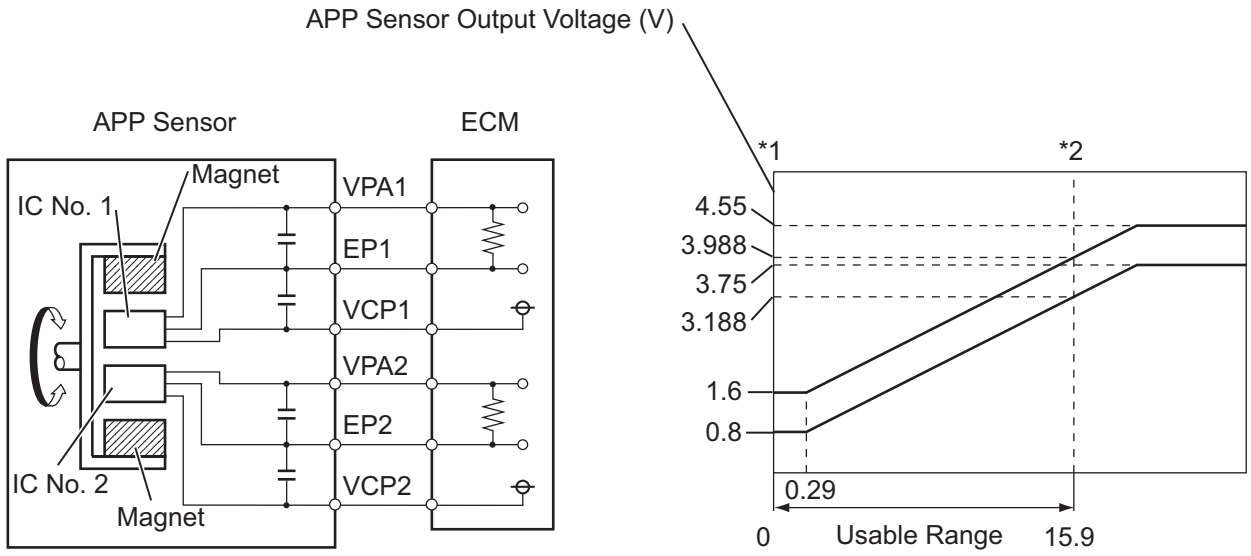

Y

A112620E10

DTC No.	DTC Detection Condition	Trouble Area
P2120	VPA fluctuates rapidly beyond upper and lower malfunction thresholds for 0.5 seconds or more (1 trip detection logic)	• Accelerator Pedal Position (APP) sensor • ECM
P2122	VPA is 0.4 V or less for 0.5 seconds or more when accelerator pedal is fully released (1 trip detection logic)	• APP sensor • Open in VCP1 circuit • Open or ground short in VPA circuit • ECM
P2123	VPA is 4.8 V or more for 2.0 seconds or more (1 trip detection logic)	• APP sensor • Open in EPA circuit • ECM
P2125	VPA2 fluctuates rapidly beyond upper and lower malfunction thresholds for 0.5 seconds or more (1 trip detection logic)	• APP sensor • ECM
P2127	VPA2 is 1.2 V or less for 0.5 seconds or more when accelerator pedal is fully released (1 trip detection logic)	• APP sensor • Open in VCP2 circuit • Open or ground short in VPA2 circuit • ECM
P2128	Conditions (a) and (b) continue for 2.0 seconds or more (1 trip detection logic): (a) VPA2 is 4.8 V or more (b) VPA is between 0.4 V and 3.45 V	• APP sensor • Open in EPA2 circuit • ECM

DTC No.	DTC Detection Condition	Trouble Area
P2138	Condition (a) or (b) continues for 2.0 seconds or more (1 trip detection logic): (a) Difference between VPA and VPA2 is 0.02 V or less (b) VPA is 0.4 V or less and VPA2 is 1.2 V or less	• Short between VPA and VPA2 circuits • APP sensor • ECM

HINT:
When any of these DTCs are set, check the APP sensor voltage by selecting the following menu items on the intelligent tester: DIAGNOSIS / ENHANCED OBD II / DATA LIST / PRIMARY / ACCEL POS #1 and ACCEL POS #2.

Trouble Areas	ACCEL POS #1 When AP Released	ACCEL POS #2 When AP Released	ACCEL POS #1 When AP Depressed	ACCEL POS #2 When AP Depressed
VCP circuit open	0 to 0.2 V	0 to 0.2 V	0 to 0.2 V	0 to 0.2 V
Open or ground short in VPA circuit	0 to 0.2 V	1.2 to 2.0 V	0 to 0.2 V	3.4 to 5.0 V
Open or ground short in VPA2 circuit	0.5 to 1.1 V	0 to 0.2 V	2.6 to 4.5 V	0 to 0.2 V
EPA circuit open	4.5 to 5.0 V	4.5 to 5.0 V	4.5 to 5.0 V	4.5 to 5.0 V
Normal condition	0.5 to 1.1 V	1.2 to 2.0 V	2.6 to 4.5 V	3.4 to 5.0 V

HINT:
- Accelerator pedal positions are expressed as voltages.
- AP denotes Accelerator Pedal.

MONITOR DESCRIPTION

When either of the voltage outputs of VPA or VPA2 deviates from the standard range, or the difference between the voltage outputs of the 2 sensor circuits is less than the threshold, the ECM determines that there is a malfunction in the APP sensor. The ECM then illuminates the MIL and sets a DTC.
Example:
When the voltage output of VPA drops below 0.4 V for more than 0.5 seconds when the accelerator pedal is fully depressed, DTC P2122 is set.
If the malfunction is not repaired successfully, a DTC is set 2 seconds after the engine is next started.

MONITOR STRATEGY

Related DTCs	P2120: Accelerator Pedal Position (APP) sensor 1 range check (fluctuating) P2122: APP sensor 1 range check (low voltage) P2123: APP sensor 1 range check (high voltage) P2125: APP sensor 2 range check (fluctuating) P2127: APP sensor 2 range check (low voltage) P2128: APP sensor 2 range check (high voltage) P2138: APP sensor range check (correlation)
Required Sensors / Components (Main)	APP sensor
Required Sensors / Components (Related)	-
Frequency of Operation	Continuous
Duration	0.5 seconds: P2120, P2122, P2125 and P2127 2.0 seconds: P2123, P2128 and P2138
MIL Operation	Immediate
Sequence of Operation	None

TYPICAL ENABLING CONDITIONS

The monitor will run whenever these DTCs are not present	None
Throttle actuator power	ON

TYPICAL MALFUNCTION THRESHOLDS

P2120:

Either of the following conditions is met	Condition A or B
A. VPA voltage when VPA2 is 0.04 V or more	0.4 V or less
B. VPA voltage	4.8 V or more

P2122:

VPA voltage when VPA2 is 0.04 V or more	0.4 V or less

P2123:

VPA voltage	4.8 V or more

P2125:

Either of the following conditions is met	Condition A or B
A. VPA2 voltage when VPA is 0.04 V or more	1.2 V or less
B. VPA2 voltage when VPA is 0.4 to 3.45 V	4.8 V or more

P2127:

VPA2 voltage when VPA is 0.04 V or more	1.2 V or less

P2128:

VPA2 voltage when VPA is 0.4 to 3.45 V	4.8 V or more

P2138:

Either of following conditions is met:	Condition A or B
Condition A	-
Difference between VPA and VPA 2 voltages	0.02 V or less
Condition B	-
VPA voltage	0.4 V or less
VPA2 voltage	1.2 V or less

COMPONENT OPERATING RANGE

Parameter	Standard Value
VPA voltage	0.4 V to 4.8 V
VPA2 voltage	1.2 V to 4.8 V
Difference between VPA and VPA2 voltages	More than 0.02 V

FAIL-SAFE

When any of DTCs P2120, P2121, P2122, P2123, P2125, P2127, P2128 and P2138 are set, the ECM enters fail-safe mode. If either of the 2 sensor circuits malfunctions, the ECM uses the remaining circuit to calculate the accelerator pedal position to allow the vehicle to continue driving. If both of the circuits malfunction, the ECM regards the accelerator pedal as being released. As a result, the throttle valve is closed and the engine idles.

Fail-safe mode continues until a pass condition is detected, and the ignition switch is turned off.

WIRING DIAGRAM

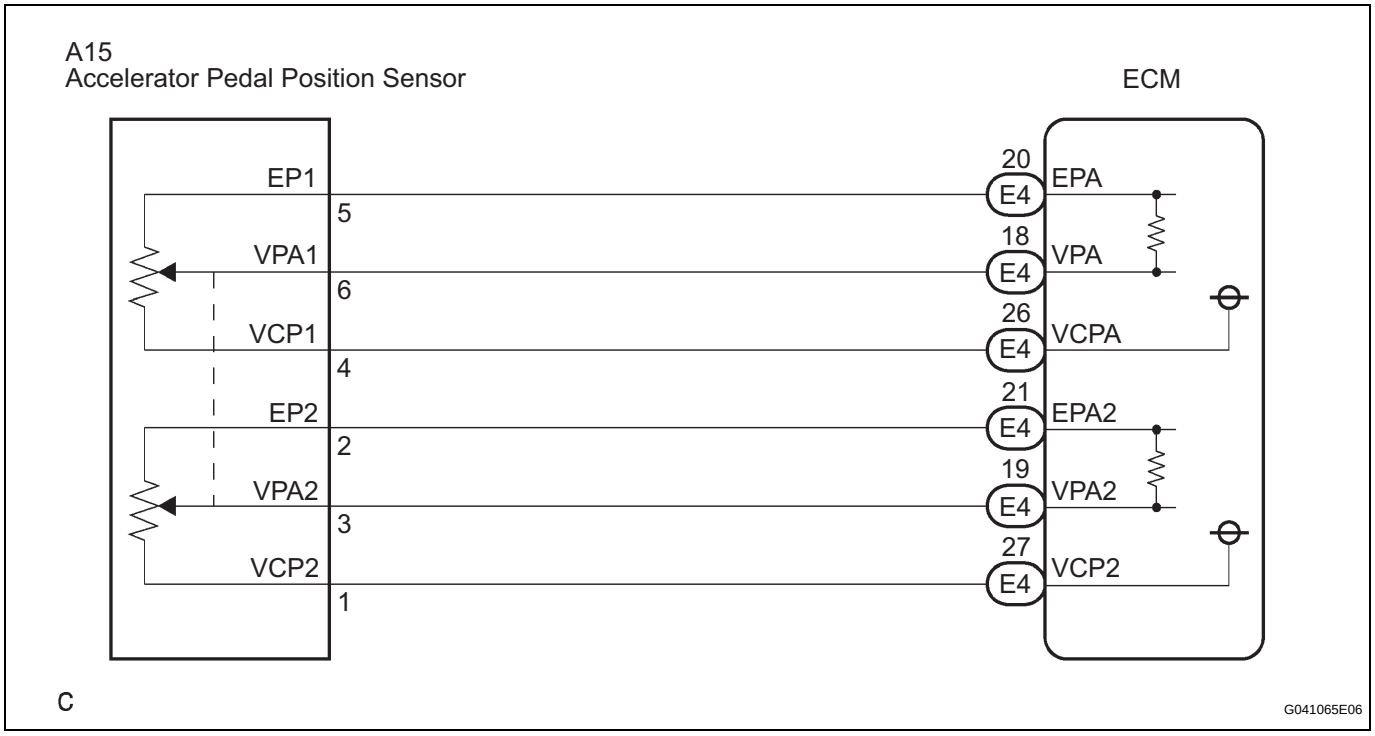

ES

INSPECTION PROCEDURE

HINT:

Read freeze frame data using the intelligent tester. The ECM records vehicle and driving condition information as freeze frame data the moment a DTC is stored. When troubleshooting, freeze frame data can be helpful in determining whether the vehicle was running or stopped, whether the engine was warmed up or not, whether the air-fuel ratio was lean or rich, as well as other data recorded at the time of a malfunction.

1	READ VALUE OF INTELLIGENT TESTER (ACCEL POS #1 AND ACCEL POS #2)

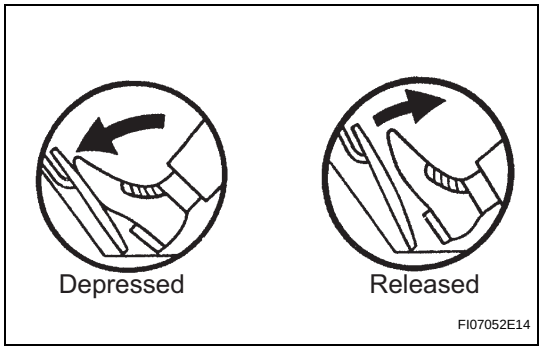

(a) Connect the intelligent tester to the DLC3.
(b) Turn the ignition switch to the ON position and turn the tester on.
(c) Select the following menu items: DIAGNOSIS / ENHANCED OBD II / DATA LIST / ALL / ACCEL POS #1 and ACCEL POS #2.
(d) Read the values displayed on the tester.

Standard voltage

Accelerator Pedal Operation	ACCEL POS #1 (AP#1)	ACCEL POS #2 (AP#2)
Released	0.5 to 1.1 V	1.2 to 2.0 V
Depressed	2.6 to 4.5 V	3.4 to 5.0 V

OK → **Go to step 5**

NG

2	CHECK HARNESS AND CONNECTOR (ACCELERATOR PEDAL POSITION SENSOR - ECM)

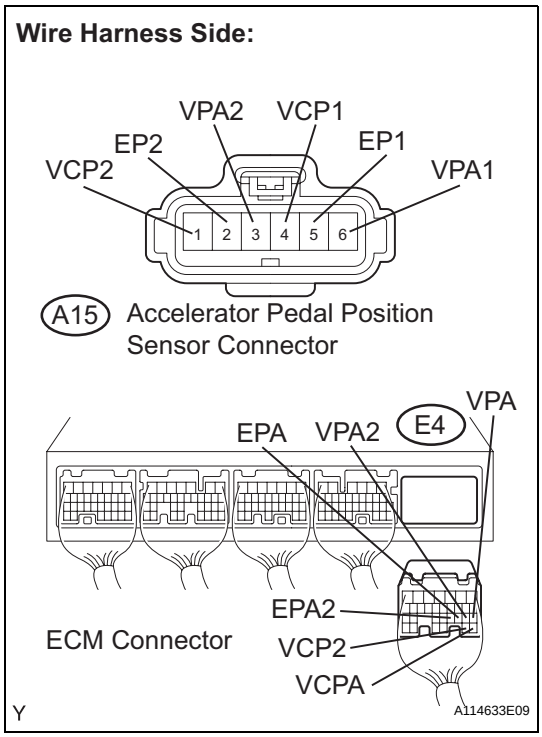

(a) Disconnect the A15 Accelerator Pedal Position (APP) sensor connector.
(b) Disconnect the E4 ECM connector.
(c) Measure the resistance according to the value(s) in the table below.

Standard resistance :

Check for open

Tester Connection	Specified Condition
VPA1 (A15-6) - VPA (E4-18)	Below 1 Ω
EP1 (A15-5) - EPA (E4-20)	Below 1 Ω
VCP1 (A15-4) - VCPA (E4-26)	Below 1 Ω
VPA2 (A15-3) - VPA2 (E4-19)	Below 1 Ω
EP2 (A15-2) - EPA2 (E4-21)	Below 1 Ω
VCP2 (A15-1) - VCP2 (E4-27)	Below 1 Ω

Check for short

Tester Connection	Specified Condition
VPA1 (A15-6) or VPA (E4-18) - Body ground	10 kΩ or higher
EP1 (A15-5) or EPA (E4-20) - Body ground	10 kΩ or higher
VCP1 (A15-4) or VCPA (E4-26) - Body ground	10 kΩ or higher
VPA2 (A15-3) or VPA2 (E4-19) - Body ground	10 kΩ or higher
EP2 (A15-2) or EPA2 (E4-21) - Body ground	10 kΩ or higher
VCP2 (A15-1) or VCP2 (E4-27) - Body ground	10 kΩ or higher

(d) Reconnect the APP sensor connector.
(e) Reconnect the ECM connector.

NG → **REPAIR OR REPLACE HARNESS OR CONNECTOR (ACCELERATOR PEDAL POSITION SENSOR - ECM)**

OK

3 INSPECT ECM (VCPA AND VCP2 VOLTAGE)

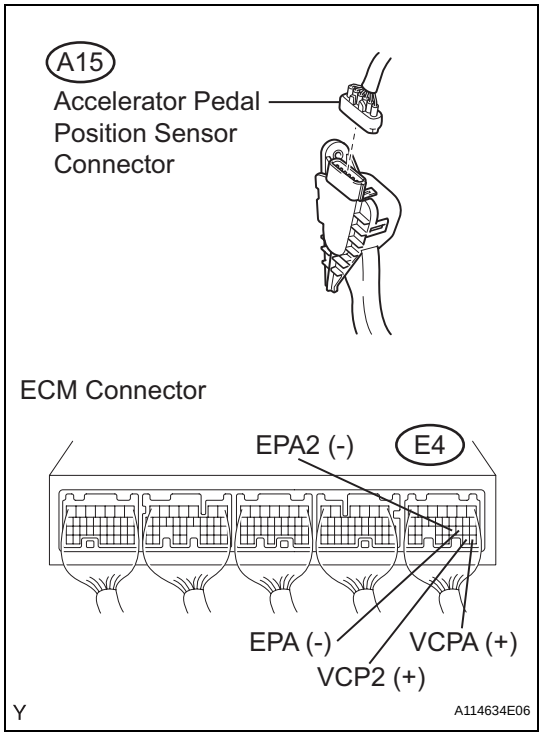

(a) Disconnect the A15 APP sensor connector.
(b) Turn the ignition switch to the ON position.
(c) Measure the voltage according to the value(s) in the table below.

Standard voltage

Tester Connection	Specified Condition
VCPA (E4-26) - EPA (E4-20)	4.5 to 5.0 V
VCP2 (E4-27) - EPA2 (E4-21)	4.5 to 5.0 V

(d) Reconnect the APP sensor connector.

ES

NG → **REPLACE ECM (See page ES-498)**

OK

4 REPLACE ACCELERATOR PEDAL ROD

(a) Replace the accelerator pedal rod assembly (See page ES-502).

NEXT

5 CHECK WHETHER DTC OUTPUT RECURS (ACCELERATOR PEDAL POSITION SENSOR DTCS)

(a) Connect the intelligent tester to the DLC3.
(b) Turn the ignition switch to the ON position and turn the tester on.
(c) Clear the DTCs (See page ES-39).
(d) Start the engine.
(e) Allow the engine to idle for 15 seconds.
(f) Select the following menu items on the tester: DIAGNOSIS / ENHANCED OBD II / DTC INFO / CURRENT CODES.
(g) Read the DTCs.

Result

Display (DTC Output)	Proceed to
P2120, P2122, P2123, P2125, P2127, P2128 and/or P2138	A
No output	B

B → SYSTEM OK

A

REPLACE ECM (See page ES-498)