DTC	P2238	Oxygen (A/F) Sensor Pumping Current Circuit Low (Bank 1 Sensor 1)
DTC	P2239	Oxygen (A/F) Sensor Pumping Current Circuit High (Bank 1 Sensor 1)
DTC	P2241	Oxygen (A/F) Sensor Pumping Current Circuit Low (Bank 2 Sensor 1)
DTC	P2242	Oxygen (A/F) Sensor Pumping Current Circuit High (Bank 2 Sensor 1)
DTC	P2252	Oxygen (A/F) Sensor Reference Ground Circuit Low (Bank 1 Sensor 1)
DTC	P2253	Oxygen (A/F) Sensor Reference Ground Circuit High (Bank 1 Sensor 1)
DTC	P2255	Oxygen (A/F) Sensor Reference Ground Circuit Low (Bank 2 Sensor 1)
DTC	P2256	Oxygen (A/F) Sensor Reference Ground Circuit High (Bank 2 Sensor 1)

ES

HINT:
- Although the DTC titles say oxygen sensor, these DTCs relate to the Air-Fuel Ratio (A/F) sensor.
- Sensor 1 refers to the sensor mounted in front of the Three-Way Catalytic Converter (TWC) and located near the engine assembly.

DESCRIPTION

Refer to DTC P2195 (See page ES-355).

DTC No.	DTC Detection Condition	Trouble Area
P2238 P2241	• Case 1: Condition (a) or (b) continues for 5.0 seconds or more (1 trip detection logic): (a) AF+ voltage is 0.5 V or less (b) (AF+) - (AF-) = 0.1 V or less • Case 2: A/F sensor admittance: Less than 0.022 1/Ω (2 trip detection logic)	• Open or short in A/F sensor (bank 1, 2 sensor 1) circuit • A/F sensor (bank 1, 2 sensor 1) • A/F sensor heater (bank 1, 2 sensor 1) • A/F sensor heater relay • A/F sensor heater and relay circuits • ECM
P2239 P2242	AF+ voltage is more than 4.5 V for 5.0 seconds or more (2 trip detection logic)	• Open or short in A/F sensor (bank 1, 2 sensor 1) circuit • A/F sensor (bank 1, 2 sensor 1) • A/F sensor heater • A/F sensor heater relay • A/F sensor heater and relay circuits • ECM

DTC No.	DTC Detection Condition	Trouble Area
P2252 P2255	AF-voltage is 0.5 V or less for 5.0 seconds or more (2 trip detection logic)	• Open or short in A/F sensor (bank 1, 2 sensor 1) circuit • A/F sensor (bank 1, 2 sensor 1) • A/F sensor heater • A/F sensor heater relay • A/F sensor heater and relay circuits • ECM
P2253 P2256	AF-voltage is more than 4.5 V for 5.0 seconds or more (2 trip detection logic)	• Open or short in A/F sensor (bank 1, 2 sensor 1) circuit • A/F sensor (bank 1, 2 sensor 1) • A/F sensor heater • A/F sensor heater relay • A/F sensor heater and relay circuits • ECM

ES

HINT:
- DTC P2238, P2239, P2252 and P2253 indicate malfunctions related to the bank 1 A/F sensor circuit.
- DTC P2241, P2242, P2255 and P2256 indicate malfunctions related to the bank 2 A/F sensor circuit.
- Bank 1 refers to the bank that includes cylinder No. 1.
- Bank 2 refers to the bank that includes cylinder No. 2.

MONITOR DESCRIPTION

The Air-Fuel Ratio (A/F) sensor varies its output voltage in proportion to the air-fuel ratio. If the A/F sensor impedance (alternating current resistance) or voltage output deviates greatly from the standard range, the ECM determines that there is an open or short malfunction in the A/F sensor circuit.

MONITOR STRATEGY

Related DTCs	P2238: A/F sensor (Bank 1) open circuit between AF+ and AF- P2238: A/F sensor (Bank 1) short circuit between AF+ and AF- P2238: A/F sensor (Bank 1) short circuit between AF+ and GND P2239: A/F sensor (Bank 1) short circuit between AF+ and +B P2241: A/F sensor (Bank 2) open circuit between AF+ and AF- P2241: A/F sensor (Bank 2) short circuit between AF+ and AF- P2241: A/F sensor (Bank 2) short circuit between AF+ and GND P2242: A/F sensor (Bank 2) short circuit between AF+ and +B P2252: A/F sensor (Bank 1) short circuit between AF- and GND P2253: A/F sensor (Bank 1) short circuit between AF- and +B P2255: A/F sensor (Bank 2) short circuit between AF- and GND P2256: A/F sensor (Bank 2) short circuit between AF- and +B
Required Sensors / Components (Main)	A/F sensor
Required Sensors / Components (Related)	Engine Coolant Temperature (ECT) sensor, Crankshaft position sensor
Frequency of Operation	Once per driving cycle
Duration	P2238 and P2241 (open circuit between AF+ and AF-): 10 seconds Others: 5 seconds
MIL Operation	2 driving cycles
Sequence of Operation	None

TYPICAL ENABLING CONDITIONS

All:

The monitor will run whenever these DTCs are not present	None

P2238 and P2241 (open circuit between AF+ and AF-):

AF+ terminal voltage	0.5 to 4.5 V
AF- terminal voltage	0.5 to 4.5 V
Difference between AF+ terminal and AF- terminal voltage	0.1 to 0.8 V
ECT	5°C (41°F) or more (varies with ECT at engine start)

Engine	Running
Fuel-cut	OFF
Time after fuel-cut OFF	5 seconds or more
A/F sensor heater	ON
Battery voltage	11 V or more
Ignition switch	ON
Time after ignition switch is OFF to ON	5 seconds or more

Others:

Battery voltage	11 V or more
Ignition switch	ON
Time after ignition switch is OFF to ON	5 seconds or more

ES

TYPICAL MALFUNCTION THRESHOLDS

P2238 and P2241 (Open circuit between AF+ and AF-):

A/F sensor admittance	Below 0.022 1/Ω

P2238 and P2241 (Short circuit between AF+ and GND):

AF+ terminal voltage	0.5 V or less

P2238 and P2241 (Short circuit between AF+ and AF-):

Difference between AF+ terminal and AF- terminal voltage	0.1 V or less

P2239 and P2242 (Short circuit between AF+ and +B):

AF+ terminal voltage	More than 4.5 V

P2252 and P2255 (Short circuit between AF- and GND):

AF- terminal voltage	0.5 V or less

P2253 and P2256 (Short circuit between AF- and +B):

AF- terminal voltage	More than 4.5 V

WIRING DIAGRAM

Refer to DTC P2195 (See page ES-359).

INSPECTION PROCEDURE

HINT:

For use of the intelligent tester only:

Malfunctioning areas can be identified by performing the A/F CONTROL function provided in the ACTIVE TEST. The A/F CONTROL function can help to determine whether the Air-Fuel Ratio (A/F) sensor, Heated Oxygen (HO2) sensor and other potential trouble areas are malfunctioning.

The following instructions describe how to conduct the A/F CONTROL operation using the intelligent tester.

(a) Connect the intelligent tester to the DLC3.

(b) Start the engine and turn the tester on.

(c) Warm up the engine at an engine speed of 2500 rpm for approximately 90 seconds.

(d) Select the following menu items on the tester: DIAGNOSIS / ENHANCED OBD II / ACTIVE TEST / A/F CONTROL.

(e) Perform the A/F CONTROL operation with the engine in an idling condition (press the RIGHT or LEFT button to change the fuel injection volume).

(f) Monitor the voltage outputs of the A/F and HO2 sensors (AFS B1S1 and O2S B1S2 or AFS B2S1 and O2S B2S2) displayed on the tester.

HINT:

- The A/F CONTROL operation lowers the fuel injection volume by 12.5% or increases the injection volume by 25%.
- Each sensor reacts in accordance with increases and decreases in the fuel injection volume.

Standard voltage

Tester Display (Sensor)	Injection Volumes	Status	Voltages
AFS B1S1 or AFS B2S1 (A/F)	+25%	Rich	Less than 3.0
AFS B1S1 or AFS B2S1 (A/F)	-12.5%	Lean	More than 3.35
O2S B1S2 or O2S B2S2 (HO2)	+25%	Rich	More than 0.55
O2S B1S2 or O2S B2S2 (HO2)	-12.5%	Lean	Less than 0.4

ES

NOTICE:

The Air-Fuel Ratio (A/F) sensor has an output delay of a few seconds and the Heated Oxygen (HO2) sensor has a maximum output delay of approximately 20 seconds.

Case	A/F Sensor (Sensor 1) Output Voltage	HO2 Sensor (Sensor 2) Output Voltage	Main Suspected Trouble Area
1	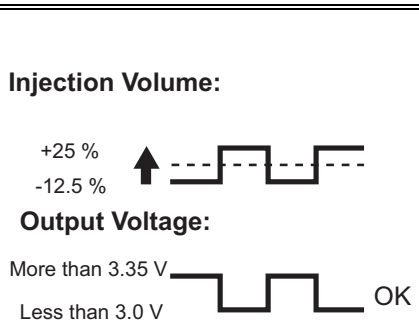	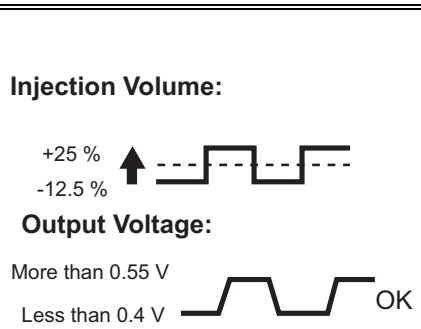	-
2	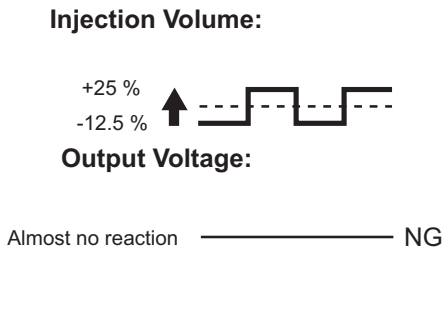	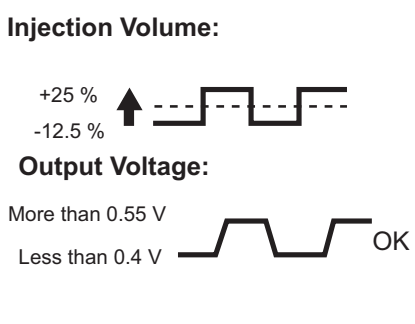	• A/F sensor • A/F sensor heater • A/F sensor circuit
3	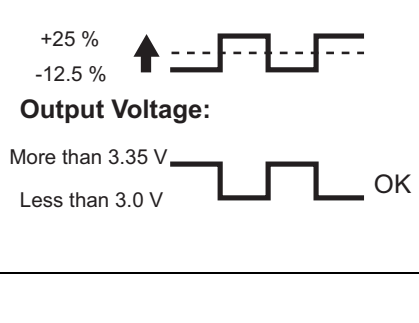	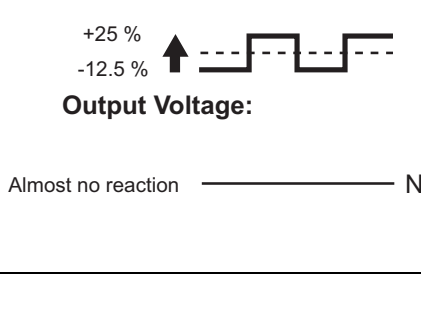	• HO2 sensor • HO2 sensor heater • HO2 sensor circuit

Case	A/F Sensor (Sensor 1) Output Voltage	HO2 Sensor (Sensor 2) Output Voltage	Main Suspected Trouble Area
4	**Injection Volume:** +25 % / -12.5 %  **Output Voltage:** Almost no reaction ——— NG	**Injection Volume:** +25 % / -12.5 %  **Output Voltage:** Almost no reaction ——— NG	• Fuel pressure • Gas leakage from exhaust system (Air-fuel ratio extremely lean or rich)

ES

– Following the A/F CONTROL procedure enables technicians to check and graph the voltage outputs of both the A/F and HO2 sensors.
– To display the graph, select the following menu items on the tester: DIAGNOSIS / ENHANCED OBD II / ACTIVE TEST / A/F CONTROL / USER DATA / AFS B1S1 and O2S B1S2 or AFS B2S1 and O2S B2S2. Press the YES button and then the ENTER button. Then press the F4 button.
HINT:
  - Read freeze frame data using the intelligent tester. The ECM records vehicle and driving condition information as freeze frame data the moment a DTC is stored. When troubleshooting, freeze frame data can be helpful in determining whether the vehicle was running or stopped, whether the engine was warmed up or not, whether the air-fuel ratio was lean or rich, as well as other data recorded at the time of a malfunction.
  - A low A/F sensor voltage could be caused by a rich air-fuel mixture. Check for conditions that would cause the engine to run rich.
  - A high A/F sensor voltage could be caused by a lean air-fuel mixture. Check for conditions that would cause the engine to run lean.

1 INSPECT AIR FUEL RATIO SENSOR (HEATER RESISTANCE)

Component Side:

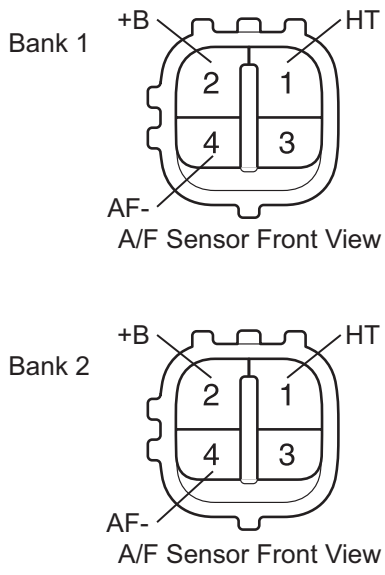

(a) Disconnect the A5 or A6 A/F sensor connector.
(b) Measure the resistance according to the value(s) in the table below.

Standard resistance:

Bank 1

Tester Connection	Condition	Specified Condition
HT (1) - +B (2)	20°C (68°F)	1.8 to 3.4 Ω
HT (1) - AF- (4)	Always	10 kΩ or higher

Bank 2

Tester Connection	Condition	Specified Condition
HT (1) - +B (2)	20°C (68°F)	1.8 to 3.4 Ω
HT (1) - AF- (4)	Always	10 kΩ or higher

(c) Reconnect the A/F sensor connector.

Result

Result	Proceed to
OK	A
NG (for 2WD model)	B
NG (for 4WD model)	C

B → REPLACE AIR FUEL RATIO SENSOR (See page EC-19)

C → REPLACE AIR FUEL RATIO SENSOR (See page EC-26)

A

2 INSPECT RELAY (A/F RELAY)

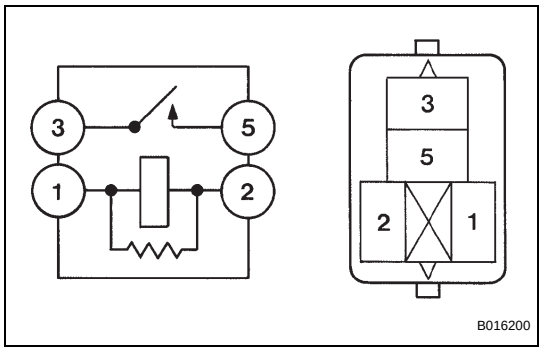

(a) Remove the A/F relay from the No. 6 engine room relay block.

(b) Measure the resistance according to the value(s) in the table below.

Standard resistance

Tester Connection	Specified Condition
3 - 5	10 kΩ or higher
3 - 5	Below 1 Ω (when battery voltage applied to terminals 1 and 2)

(c) Reinstall the A/F relay.

NG → REPLACE RELAY (A/F RELAY)

OK

3	CHECK HARNESS AND CONNECTOR (A/F SENSOR - ECM)

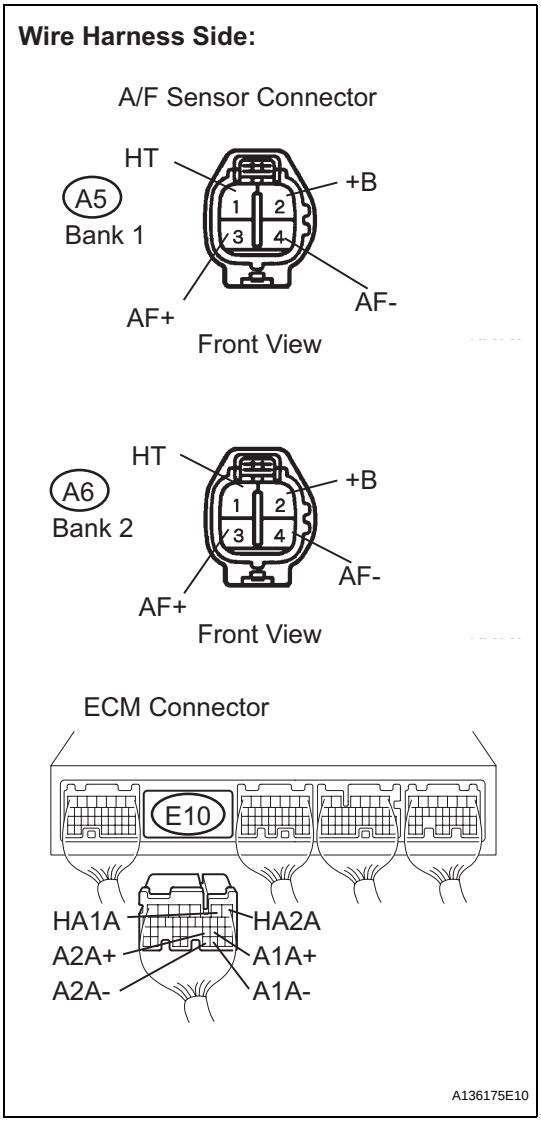

(a) Disconnect the A5 or A6 A/F sensor connector.
(b) Turn the ignition switch to the ON position.
(c) Measure the voltage according to the value(s) in the table below.

Standard voltage

Tester Connection	Specified Condition
+B (A5-2) - Body ground	9 to 14 V
+B (A6-2) - Body ground	9 to 14 V

(d) Turn the ignition switch off.
(e) Disconnect the E10 ECM connector.
(f) Measure the resistance according to the value(s) in the table below.

Standard resistance :

Check for open

Tester Connection	Specified Condition
HT (A5-1) - HA1A (E10-2)	Below 1 Ω
AF+ (A5-3) - A1A+ (E10-22)	Below 1 Ω
AF- (A5-4) - A1A- (E10-30)	Below 1 Ω
HT (A6-1) - HA2A (E10-1)	Below 1 Ω
AF+ (A6-3) - A2A+ (E10-23)	Below 1 Ω
AF- (A6-4) - A2A- (E10-31)	Below 1 Ω

Check for short

Tester Connection	Specified Condition
HT (A5-1) or HA1A (E10-2) - Body ground	10 kΩ or higher
AF+ (A5-3) or A1A+ (E10-22) - Body ground	10 kΩ or higher
AF- (A5-4) or A1A- (E10-30) - Body ground	10 kΩ or higher
HT (A6-1) or HA2A (E10-1) - Body ground	10 kΩ or higher
AF+ (A6-3) or A2A+ (E10-23) - Body ground	10 kΩ or higher
AF- (A6-4) or A2A- (E10-31) - Body ground	10 kΩ or higher

(g) Reconnect the ECM connector.
(h) Reconnect the A/F sensor connector.

Reference (System Diagram of Bank 1 Sensor 1):

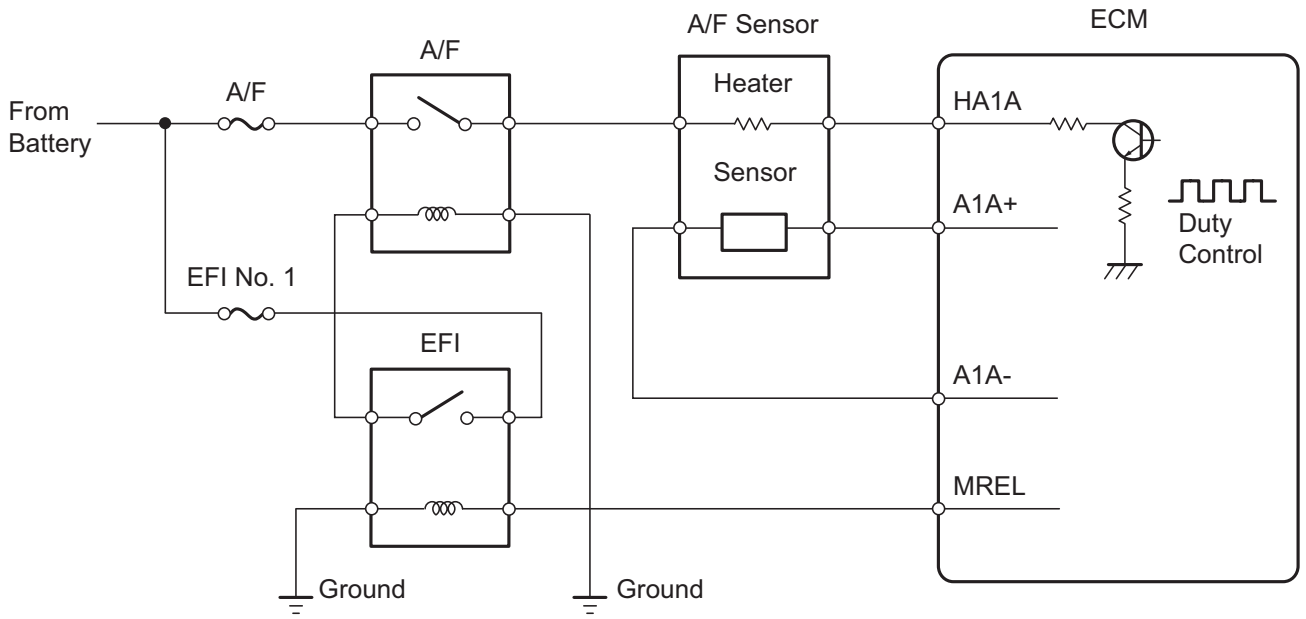

ES

NG → **REPAIR OR REPLACE HARNESS OR CONNECTOR (A/F SENSOR - ECM)**

OK

REPLACE ECM (See page ES-498)