EVAP System

RELATED DTCS

DTC	Monitoring Item	See procedure
P043E	0.02 inch orifice clogged (built into pump module)	ES-257
P043F	0.02 inch orifice high-flow (built into pump module)	
P0441	• Purge VSV (Vacuum Switching Valve) stuck closed • Purge VSV stuck open • Purge flow	ES-262
P0450	Pressure sensor (built into pump module) voltage abnormal fluctuation	ES-269
P0451	• Pressure sensor (built into pump module) noise • Pressure sensor (built into pump module) signal becomes fixed/flat	
P0452	Pressure sensor (built into pump module) voltage low	
P0453	Pressure sensor (built into pump module) voltage high	
P0455	EVAP gross leak	ES-278
P0456	EVAP small leak	
P2401	Vacuum pump stuck OFF (built into pump module)	ES-257
P2402	Vacuum pump stuck ON (built into pump module)	
P2419	Vent valve stuck ON (closed) (built into pump module)	
P2420	Vent valve stuck OFF (vent) (built into pump module)	ES-380
P2610	Soak timer (built into ECM)	ES-384

If any EVAP system DTCs are set, the malfunctioning area can be determined using the table below.

DTCs / Malfunctioning Areas	P043E P043F	P0441	P0450	P0451	P0452	P0453	P0455	P0456	P2401 P2402	P2419	P2420
0.02 inch orifice clogged	●								●	●	
0.02 inch orifice high-flow	●								●	●	
Purge VSV stuck open		●					●				
Purge VSV stuck closed		●									
Pressure sensor stuck				●							
Pressure sensor noise				●							
Pressure sensor low output			●		●						
Pressure sensor high output			●			●					
Gross leak		●					●				
Small leak								●			
Vacuum pump stuck OFF	●								●	●	
Vacuum pump stuck ON	●								●	●	
Vent valve stuck ON (closed)	●								●	●	
Vent valve stuck OFF (vent)											●

Y A106731E15

ES

NOTICE:
If the 0.02 inch reference pressure difference between the first and second checks is greater than the specification, the DTCs corresponding to the reference pressure (P043E, P043F, P0441, P0455, P0456, P2401, P2420) will be all stored.

CONFIRMATION DRIVING PATTERN

HINT:
After a repair, check Monitor Status by performing the Key-Off Monitor Confirmation and Purge Flow Monitor Confirmation described below.

1. KEY-OFF MONITOR CONFIRMATION

(a) Preconditions
The monitor will not run unless:
(1) The vehicle has been driven for 10 minutes or more (in a city area or on a freeway)
(2) The fuel tank is less than 90% full
(3) The altitude is less than 8000 ft (2400 m)
(4) The Engine Coolant Temperature (ECT) is between 4.4°C and 35°C (40°F and 95°F)
(5) The Intake Air Temperature (IAT) is between 4.4°C and 35°C (40°F and 95°F)
(6) The vehicle remains stationary (the vehicle speed is 0 mph [0 km/h])

(b) Monitor Conditions
(1) Allow the engine to idle for at least 5 minutes.

(2) Turn the ignition switch off and wait for 6 hours (8 or 10.5 hours).
HINT:
Do not start the engine until checking MONITOR STATUS. If the engine is started, the steps described above must be repeated.

(c) Monitor Status
(1) Connect the intelligent tester to the DLC3.
(2) Turn the ignition switch to the ON position and turn the tester on.
(3) Select the following menu items: DIAGNOSIS / ENHANCED OBD II / MONITOR STATUS.
(4) Check the "Monitor Status" displayed on the tester.
HINT:
If INCMP is displayed, the monitor is not completed. Make sure that the preconditions have been met, and perform "Monitor Conditions" again.

ES

2. PURGE FLOW MONITOR CONFIRMATION (P0441)

HINT:
Perform this monitor confirmation after the Key-Off Monitor Confirmation shows COMPL (complete).

(a) Preconditions
The monitor will not run unless:
- The vehicle has been driven for 10 minutes or more (in a city area or on a freeway)
- The ECT is between 4.4°C and 35°C (40°F and 95°F)
- The IAT is between 4.4°C and 35°C (40°F and 95°F)

(b) Monitor Conditions
(1) Release the pressure from the fuel tank by removing and reinstalling the fuel tank cap.
(2) Warm the engine up until the ECT reaches more than 75°C (167°F).
(3) Increase the engine speed to 3000 rpm once.
(4) Allow the engine to idle and turn the A/C ON for 1 minute.

(c) Monitor Status
(1) Turn the ignition switch off.
(2) Connect the intelligent tester to the DLC3.
(3) Turn the ignition switch to the ON position and turn the tester on.
(4) Select the following menu items: DIAGNOSIS / ENHANCED OBD II / MONITOR STATUS.
(5) Check the "Monitor Status" displayed on the tester.
HINT:
If INCMP is displayed, the monitor is not completed. Make sure that the preconditions have been met, and perform "Monitor Conditions" again.

MONITOR RESULT

Refer to Checking Monitor Status for detailed information (See page ES-19).
The test value and test limit information are described as shown in the following table. This information is included in MONITOR RESULT of the emissions-related DTC sections:
– MID (Monitor Identification Data) is assigned to each emissions-related component.
– TID (Test Identification Data) is assigned to each test value.
– Scaling is used to calculate the test value indicated on generic OBD II scan tools.

Thermostat

MID	TID	Scaling	Description of Test Value	Minimum Test Limit	Maximum Test Limit
$3D	$C9	Multiply by 0.01 [kPa]	Test value for small leak (P0456) Refer to pressure D*	Minimum test limit for small leak	Maximum test limit for small leak
$3D	$CA	Multiply by 0.01 [kPa]	Test value for gross leak (P0455) Refer to pressure E*	Minimum test limit for gross leak	Maximum test limit for gross leak
$3D	$CB	Multiply by 0.01 [kPa]	Test value for vacuum pump stuck OFF (P2401) Refer to pressure A*	Minimum test limit for vacuum pump stuck OFF	Maximum test limit for vacuum pump stuck OFF
$3D	$CD	Multiply by 0.01 [kPa]	Test value for vacuum pump stuck ON (P2402) Refer to pressure A*	Minimum test limit for vacuum pump stuck ON	Maximum test limit for vacuum pump stuck ON

MID	TID	Scaling	Description of Test Value	Minimum Test Limit	Maximum Test Limit
$3D	$CE	Multiply by 0.01 [kPa]	Test value for vent valve stuck OFF (vent) (P2420) Refer to pressure C*	Minimum test limit for vent valve stuck ON	Maximum test limit for vent valve stuck ON
$3D	$CF	Multiply by 0.01 [kPa]	Test value for vent valve stuck ON (P2419) Refer to pressure A*	Minimum test limit for vent valve stuck OFF	Maximum test limit for vent valve stuck OFF
$3D	$D0	Multiply by 0.01 [kPa]	Test value for 0.02 inch orifice low flow (P043E) Refer to pressure B*	Minimum test limit for 0.02 inch orifice low flow	Maximum test limit for 0.02 inch orifice low flow
$3D	$D1	Multiply by 0.01 [kPa]	Test value for 0.02 inch orifice high flow (P043F) Refer to pressure A*	Minimum test limit for 0.02 inch orifice high flow	Maximum test limit for 0.02 inch orifice high flow
$3D	$D4	Multiply by 0.01 [kPa]	Test value for purge VSV stuck closed (P0441) Refer to pressure F*	Minimum test limit for purge VSV stuck closed	Maximum test limit for purge VSV stuck closed
$3D	$D5	Multiply by 0.01 [kPa]	Test value for purge VSV stuck open (P0441) Refer to pressure E*	Minimum test limit for purge VSV stuck open	Maximum test limit for purge VSV stuck open
$3D	$D7	Multiply by 0.01 [kPa]	Test value for purge flow (P0441) Refer to pressure G*	Minimum test limit for purge flow	Maximum test limit for purge flow

* Pressures A to G are indicated as shown in the diagram below.

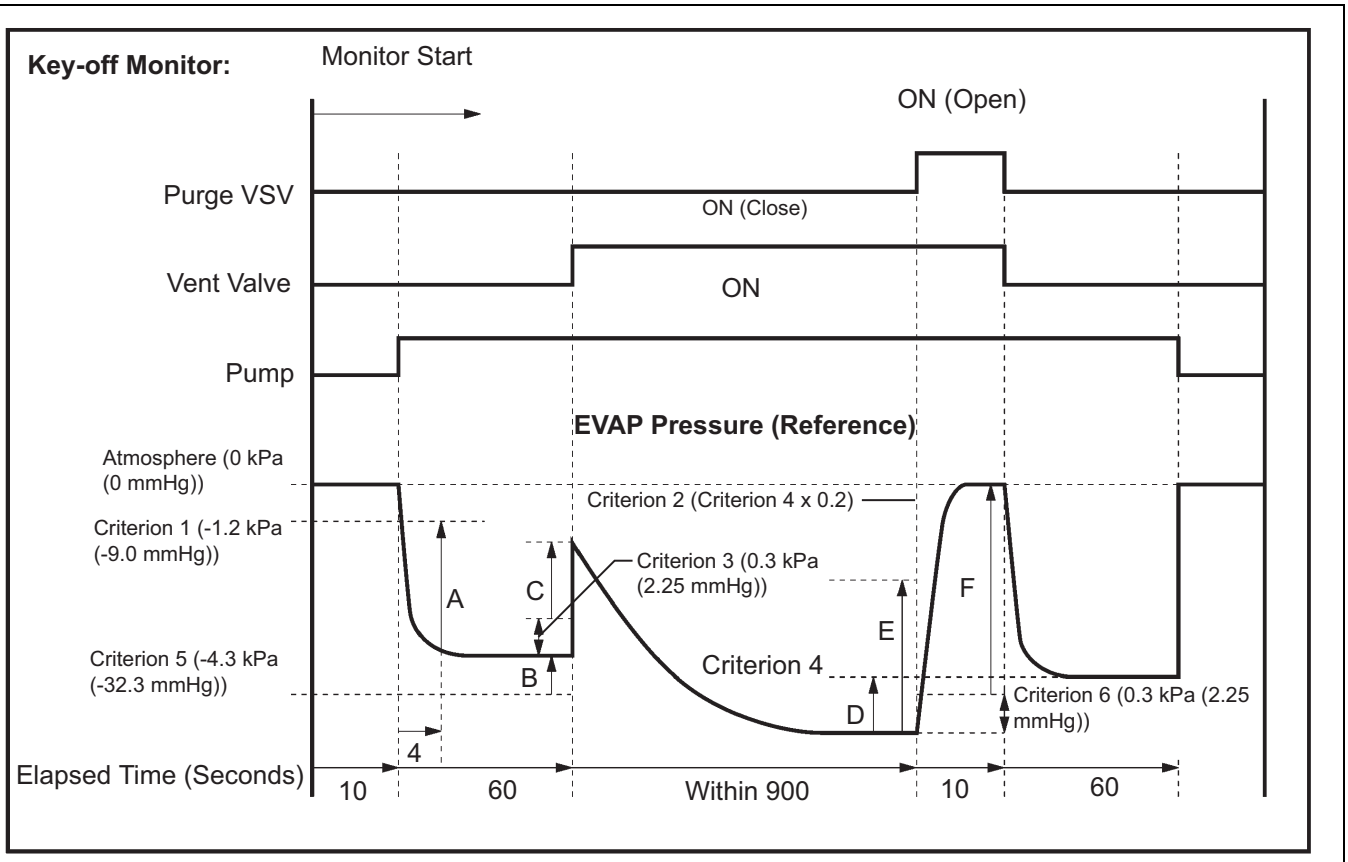

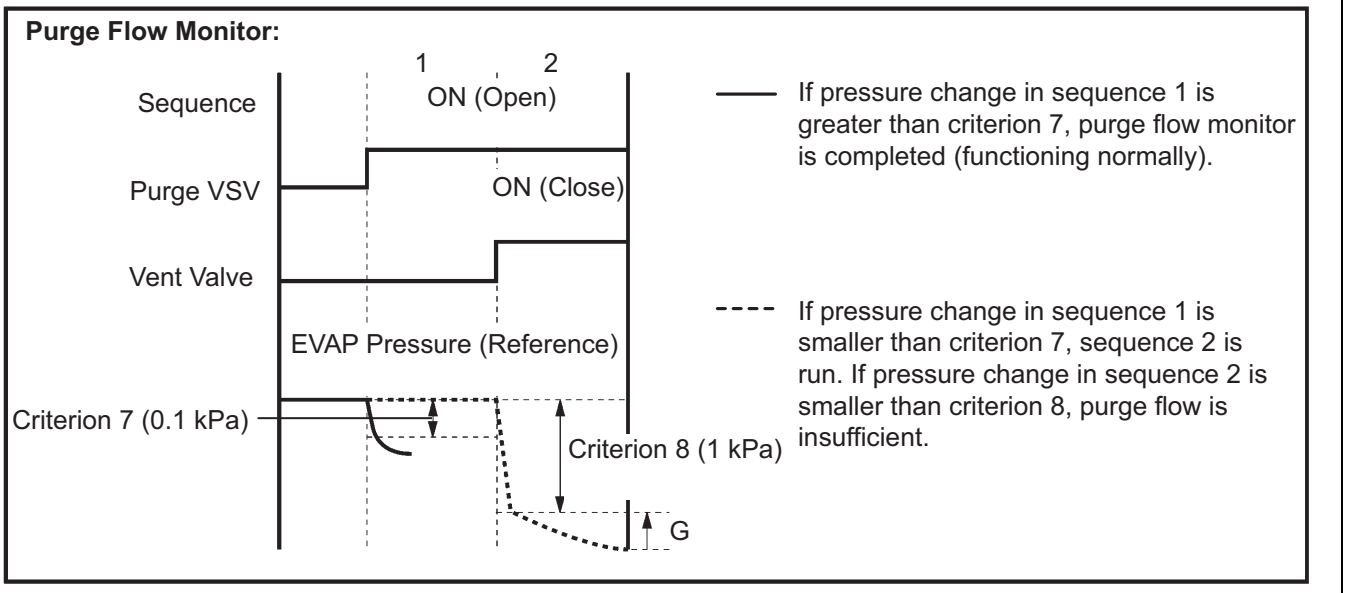

C

G038136E05

DESCRIPTION

Location of EVAP (Evaporative Emission) System:

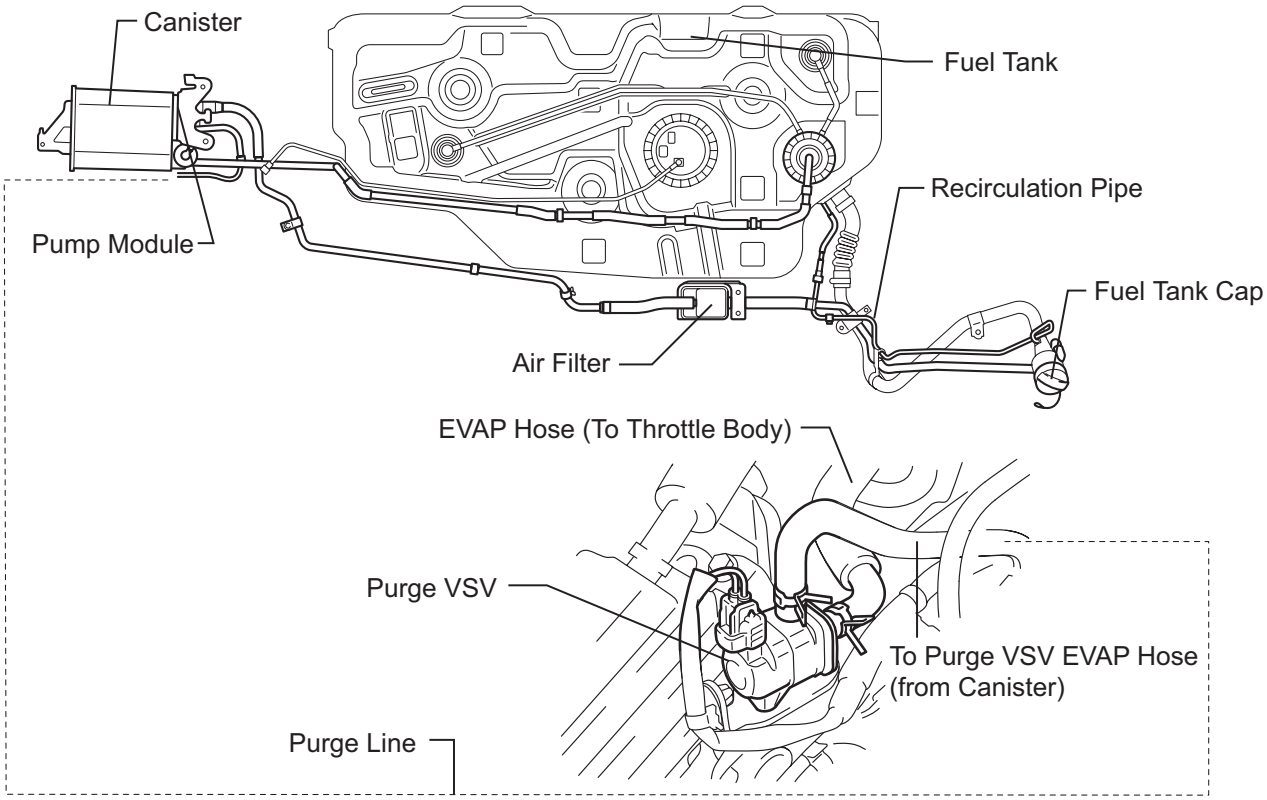

EVAP System Circuit:

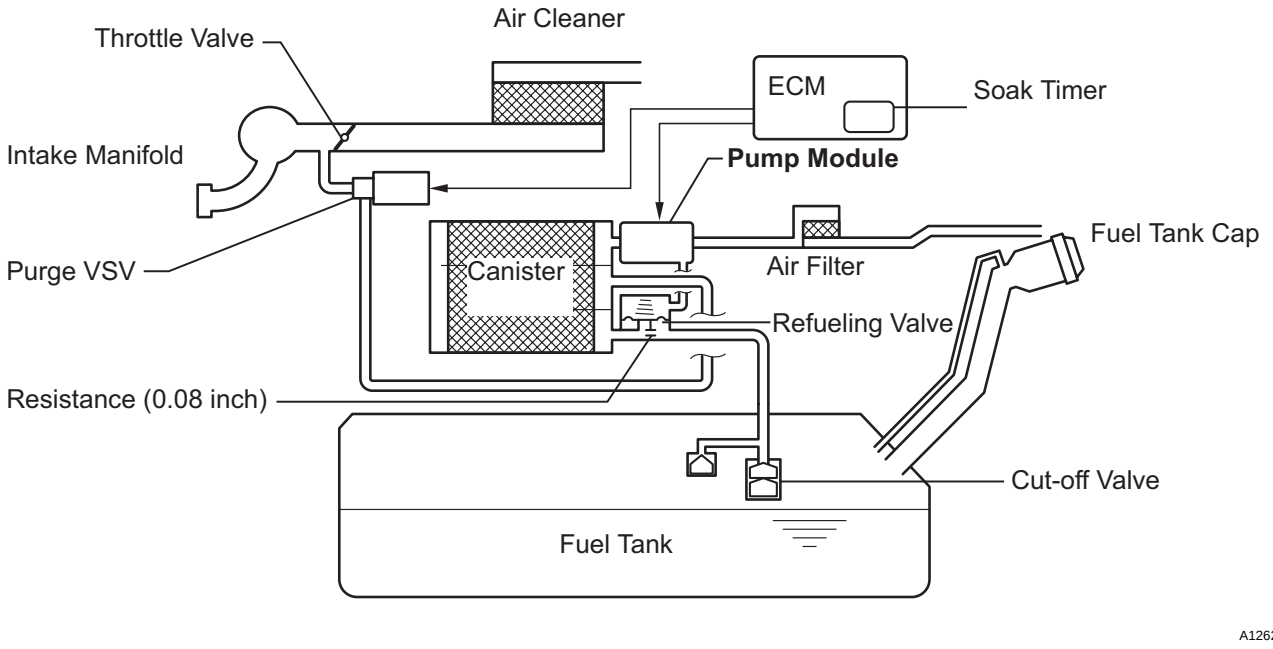

While the engine is running, if a predetermined condition (closed-loop, etc.) is met, the purge VSV is opened by the ECM and fuel vapors stored in the canister are purged to the intake manifold. The ECM changes the duty cycle ratio of the purge VSV to control purge flow volume.

The purge flow volume is also determined by the intake manifold pressure. Atmospheric pressure is allowed into the canister through the vent valve to ensure that the purge flow is maintained when negative pressure (vacuum) is applied to the canister.
The following two monitors run to confirm appropriate EVAP system operation.

1. Key-off monitor

This monitor checks for EVAP (Evaporative Emission) system leaks and pump module malfunctions. The monitor starts 5 hours* after the ignition switch is turned off. More than 5 hours are required to allow the fuel to cool down to stabilize the Fuel Tank Pressure (FTP), thus making the EVAP system monitor more accurate.
The electric vacuum pump creates negative pressure (vacuum) in the EVAP system, and the pressure is measured. Finally, the ECM monitors for leaks from the EVAP system and malfunctions in both the pump module and purge VSV, based on the EVAP pressure.
HINT:
*: If the engine coolant temperature is not below 35°C (95°F) 5 hours after the ignition switch is turned off, the monitor check starts 2 hours later. If it is still not below 35°C (95°F) 7 hours after the ignition switch is turned off, the monitor check starts 2.5 hours later.

2. Purge flow monitor

The purge flow monitor consists of the two monitors. The 1st monitor is always conducted every time and the 2nd monitor is activated if necessary.

- The 1st monitor
  While the engine is running and the purge VSV (Vacuum Switching Valve) is ON (open), the ECM monitors the purge flow by measuring the EVAP pressure change. If negative pressure is not created, the ECM begins the 2nd monitor.
- The 2nd monitor
  The vent valve is turned OFF (open) and the EVAP pressure is then measured. If the variation in the pressure is less than 0.5 kPa (3.75 mmHg), the ECM interprets this as the purge VSV being stuck closed, and illuminates the MIL and sets DTC P0441 (2 trip detection logic).

Atmospheric pressure check:

In order to ensure reliable malfunction detection, the variation between the atmospheric pressures, before and after conduction of the purge flow monitor, is measured by the ECM.

EVAP Purge Flow:

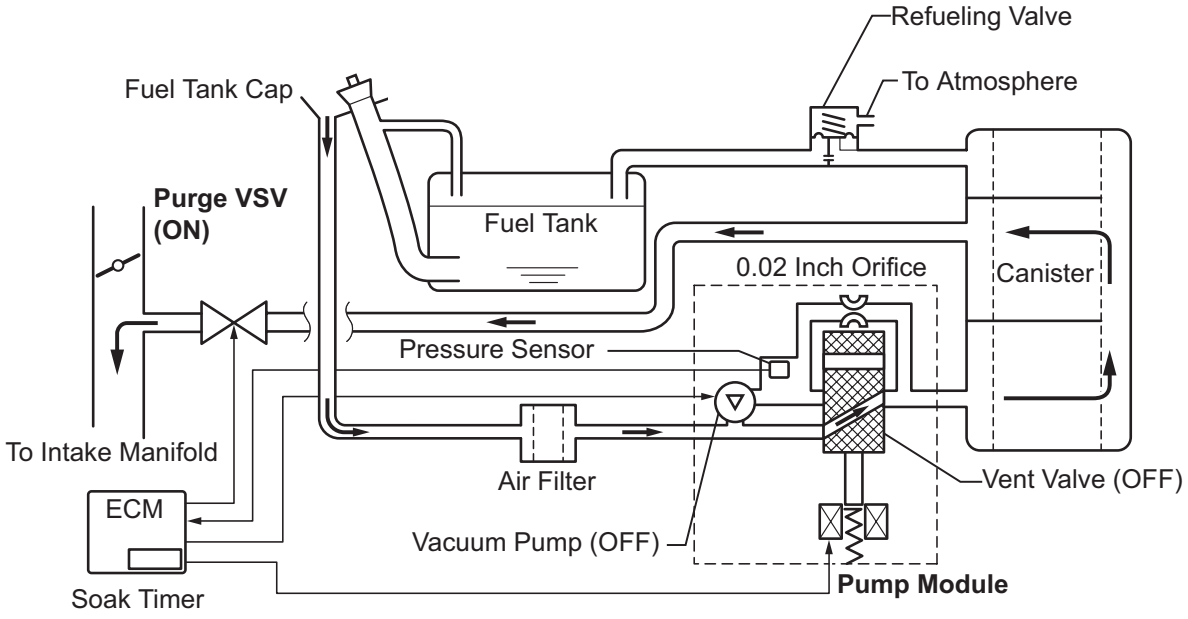

N A126271E05

Component	Operation
Canister	Contains activated charcoal to absorb EVAP (Evaporative Emissions) generated in fuel tank.

Component	Operation
Cut-off valve	Located in fuel tank. Valve floats and closes when fuel tank is 100% full.
Purge VSV (Vacuum Switching Valve)	Opens or closes line between canister and intake manifold. ECM uses purge VSV to control EVAP purge flow. In order to discharge EVAP absorbed by canister to intake manifold, ECM opens purge VSV. EVAP discharge volume to intake manifold is controlled by purge VSV duty cycle ratio (current-carrying time). (Open: ON, Close: OFF)
Refueling valve	Controls EVAP pressure from fuel tank to canister. Valve consists of diaphragm, spring and restrictor (diameter: 0.08 inch). When fuel vapor and pressure inside fuel tank increase, valve opens. While EVAP is purged, valve closes and restrictor prevents a large amount of vacuum from affecting pressure in fuel tank. Valve is opened while refueling. When valve is open, adding fuel into fuel tank is possible.
Roll-over valve	Located in fuel tank. Valve closes by its own weight when vehicle overturns to prevent fuel from spilling out.
Service port	Used for connecting vacuum gauge for inspecting EVAP system.
Soak timer	Built into ECM. To ensure accurate EVAP monitor, measures 5 hours (+/- 15 min.) after ignition switch is turned off. This allows fuel to cool down, stabilizing Fuel Tank Pressure (FTP). When approx. 5 hours elapsed, ECM activates.
Canister pump module	Consists of (a) to (d) below. Pump module cannot be disassembled.
(a) Vent valve	Vents and closes EVAP system. When ECM turns valve ON, EVAP system is closed. When ECM turns valve OFF, EVAP system is vented. Negative pressure (vacuum) is created in EVAP system to check for EVAP leaks by closing purge VSV and vent valve (closed), and operating vacuum pump are turned on (refer to fig. 1).
(b) Canister pressure sensor	Indicates pressure as voltages. ECM supplies regulated 5 V to pressure sensor, and uses feedback from sensor to monitor EVAP system pressure (refer to fig 2).
(c) Vacuum pump	Creates negative pressure (vacuum) in EVAP system for leak check.
(d) 0.02 inch orifice	Has an opening with 0.02 inch diameter. Vacuum is produced through orifice by closing purge VSV, turning off vent valve and operating vacuum pump, to monitor 0.02 inch leak pressure. 0.02 inch leak pressure indicates a small leak of EVAP.

Pump Module (fig. 1):

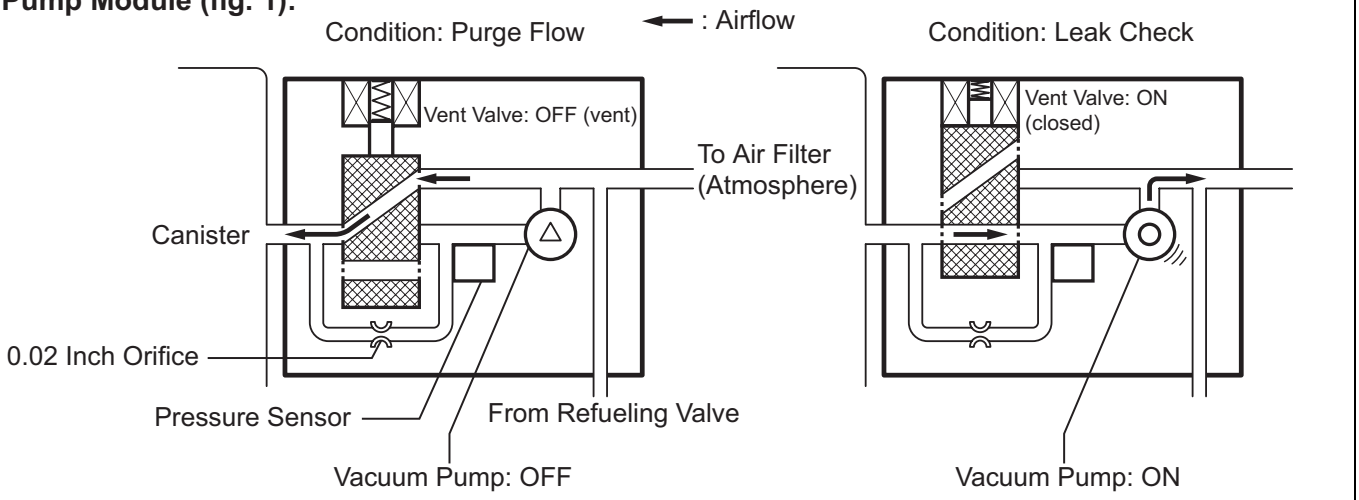

Pressure Sensor Specification (fig. 2):

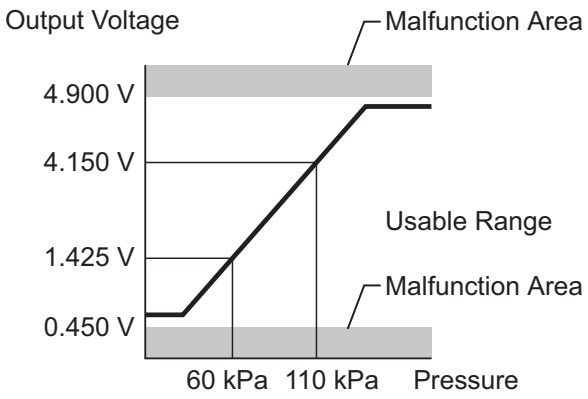

Soak Timer Circuit (fig. 3):

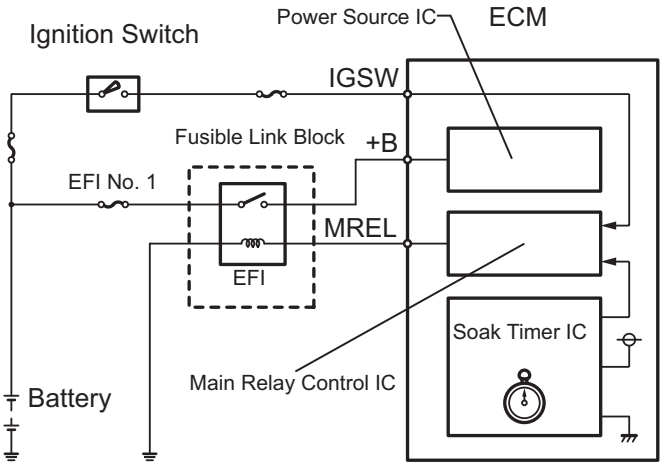

P

A118976E04

WIRING DIAGRAM

Refer to DTC P0450 (See page ES-272).

INSPECTION PROCEDURE

NOTICE:

An intelligent tester is required to conduct the following diagnostic troubleshooting procedure.

HINT:

- Using intelligent tester monitor results enables the EVAP (Evaporative Emission) system to be confirmed.
- Read freeze frame data using the intelligent tester. The ECM records vehicle and driving condition information as freeze frame data the moment a DTC is stored. When troubleshooting, freeze frame data can be helpful in determining whether the vehicle was running or stopped, whether the engine was warmed up or not, whether the air-fuel ratio was lean or rich, as well as other data recorded at the time of a malfunction.

1	CONFIRM DTC

(a) Turn the ignition switch off and wait for 10 seconds.
(b) Turn the ignition switch to the ON position.

(c) Turn the ignition switch off and wait for 10 seconds.
(d) Connect the intelligent tester to the DLC3.
(e) Turn the ignition switch to the ON position and turn the tester on.
(f) Select the following menus: DIAGNOSIS / ENHANCED OBD II / DTC INFO / CURRENT CODES.
(g) Confirm DTCs and freeze frame data.
If any EVAP system DTCs are set, the malfunctioning area can be determined using the table below.

DTCs / Malfunctioning Areas	P043E P043F	P0441	P0450	P0451	P0452	P0453	P0455	P0456	P2401 P2402	P2419	P2420
0.02 inch orifice clogged	●								●	●	
0.02 inch orifice high-flow	●								●	●	
Purge VSV stuck open		●					●				
Purge VSV stuck closed		●									
Pressure sensor signal becomes fixed/flax				●							
Pressure sensor noise				●							
Pressure sensor voltage low			●		●						
Pressure sensor voltage high			●			●					
Gross leak		●					●				
Small leak								●			
Vacuum pump stuck OFF	●								●	●	
Vacuum pump stuck ON	●								●	●	
Vent valve stuck ON (closed)	●								●	●	
Vent valve stuck OFF (vent)											●

Y

A106731E16

NOTICE:
If the 0.02 inch reference pressure difference between the first and second checks is greater than the specification, the DTCs corresponding to the reference pressure (P043E, P043F, P0441, P0455, P0456, P2401 and P2420) will all be stored.

NEXT

2	PERFORM EVAP SYSTEM CHECK (AUTO OPERATION)

NOTICE:

- **In the EVAP SYSTEM CHECK (AUTO OPERATION), the series of 5 EVAP SYSTEM CHECK steps is performed automatically by the intelligent tester. It takes a maximum of approximately 18 minutes.**
- **Do not perform the EVAP SYSTEM CHECK when the fuel tank is more than 90% full because the cut-off valve may be closed, making the leak check of the fuel tank unavailable.**
- **Do not run the engine in this step.**
- **When the temperature of the fuel is 35°C (95°F) or more, a large amount of vapor forms and any check results become inaccurate. When performing the EVAP SYSTEM CHECK, keep the temperature below 35°C (95°F).**

(a) Connect the intelligent tester to the DLC3.

(b) Clear the DTCs (See page ES-39).

(c) Select the following menu items on the tester: DIAGNOSIS / ENHANCED OBD II / SYSTEM CHECK / EVAP SYS CHECK / AUTO OPERATION.

(d) After the EVAP SYSTEM CHECK is completed, check for pending DTCs by selecting the following menu items: DIAGNOSIS / ENHANCED OBD II / DTC INFO / PENDING CODES.

HINT:

If no pending DTC is displayed, perform the Monitor Confirmation after this repair is completed. After this confirmation, check for pending DTCs. If no DTC is displayed, the EVAP system is normal.

NEXT

3	PERFORM EVAP SYSTEM CHECK (MANUAL OPERATION)

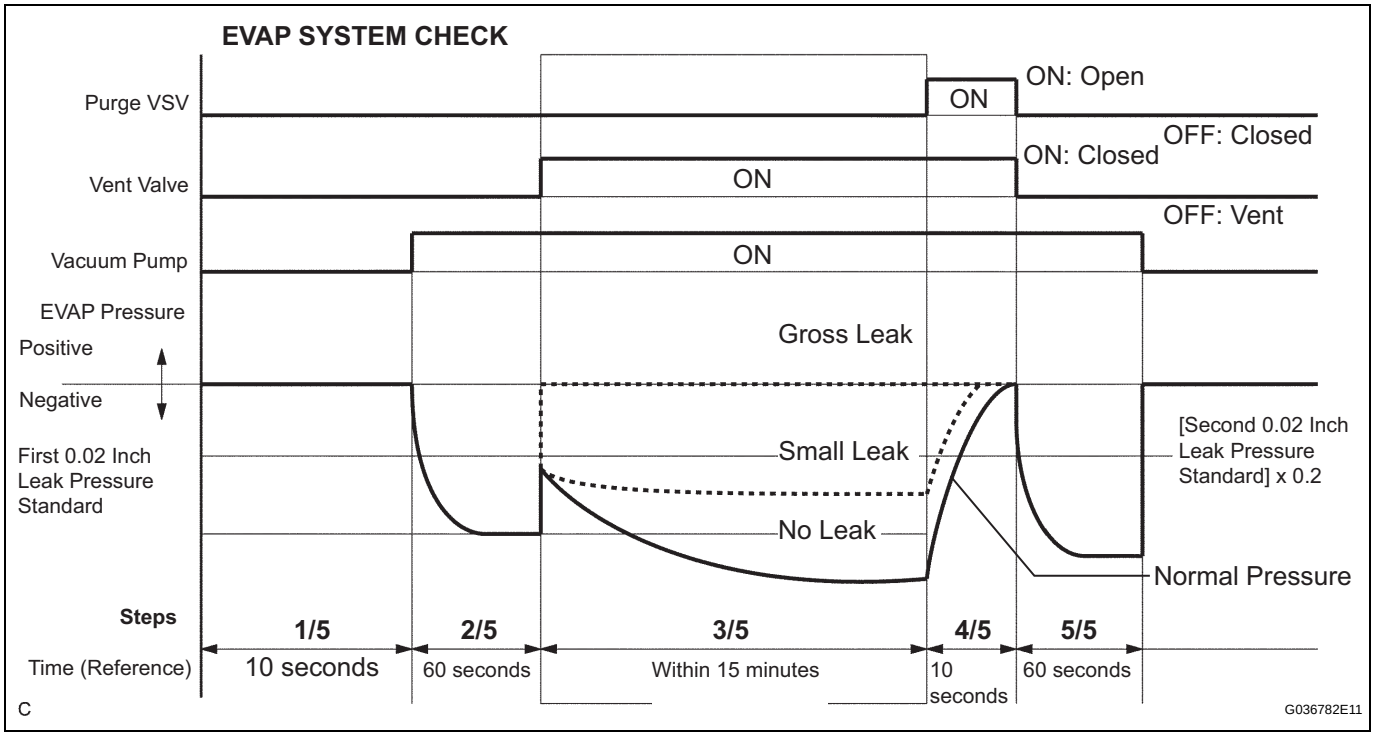

NOTICE:

- **In the EVAP SYSTEM CHECK (MANUAL OPERATION), the series of 5 EVAP SYSTEM CHECK steps is performed manually by the intelligent tester.**
- **Do not perform the EVAP SYSTEM CHECK when the fuel tank is more than 90% full because the cut-off valve may be closed, making the leak check of the fuel tank unavailable.**
- **Do not run the engine in this step.**
- **When the temperature of the fuel is 35°C (95°F) or more, a large amount of vapor forms and any check results become inaccurate. When performing the EVAP SYSTEM CHECK, keep the temperature below 35°C (95°F).**

(a) Connect the intelligent tester to the DLC3.
(b) Clear the DTCs (See page ES-39).
(c) Select the following menu items: DIAGNOSIS / ENHANCED OBD II / SYSTEM CHECK / EVAP SYS CHECK / MANUAL OPERATION.

NEXT

4	PERFORM EVAP SYSTEM CHECK (STEP 1/5)

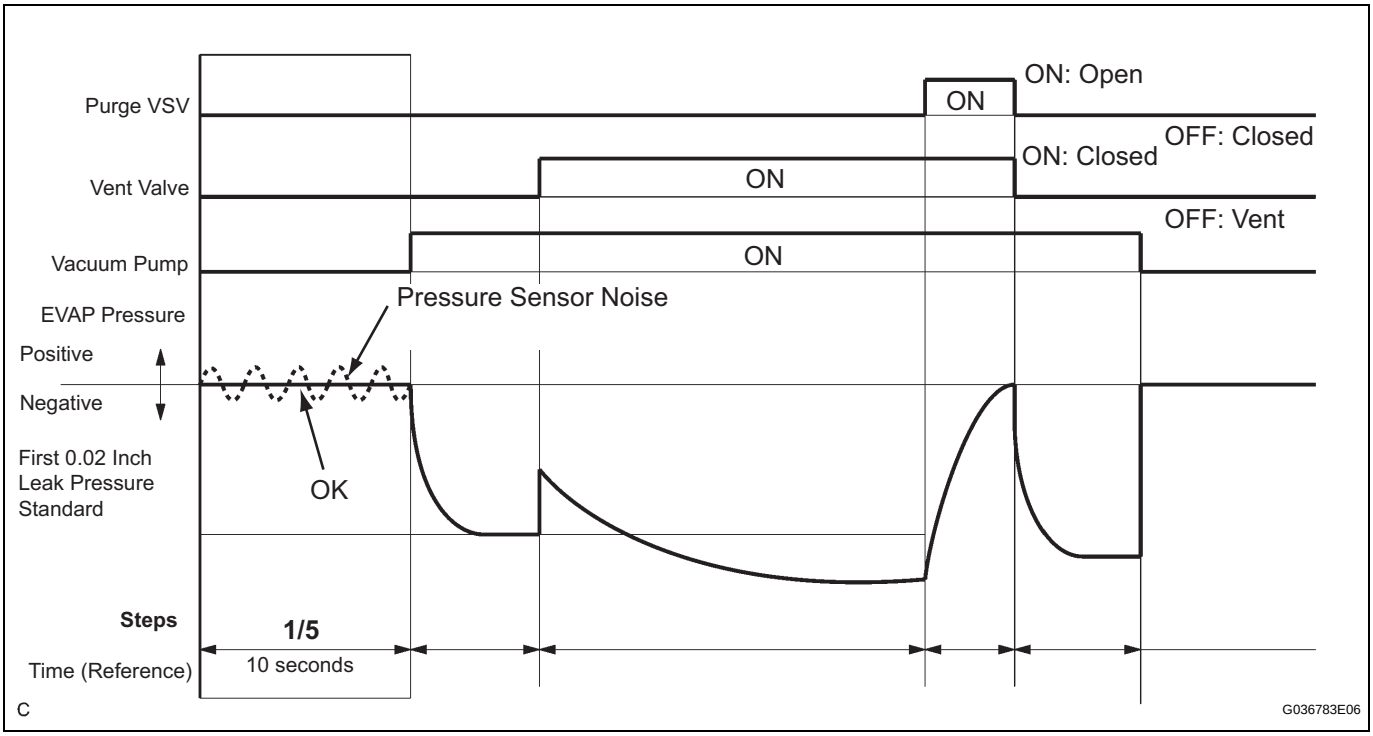

(a) Check the EVAP pressure in step 1/5.

Result

DTC*	Test Result	Suspected Trouble Area	Proceed to
-	Virtually no variation in EVAP pressure	Not yet determined	A
P0451	EVAP pressure fluctuates by +/-0.3 kPa (2.25 mmHg) or more	Pressure sensor noising	B

*: The DTCs relating to the EVAP system displayed on the intelligent tester when checking.

B → Go to step 30

A

5	PERFORM EVAP SYSTEM CHECK (STEP 1/5 TO 2/5)

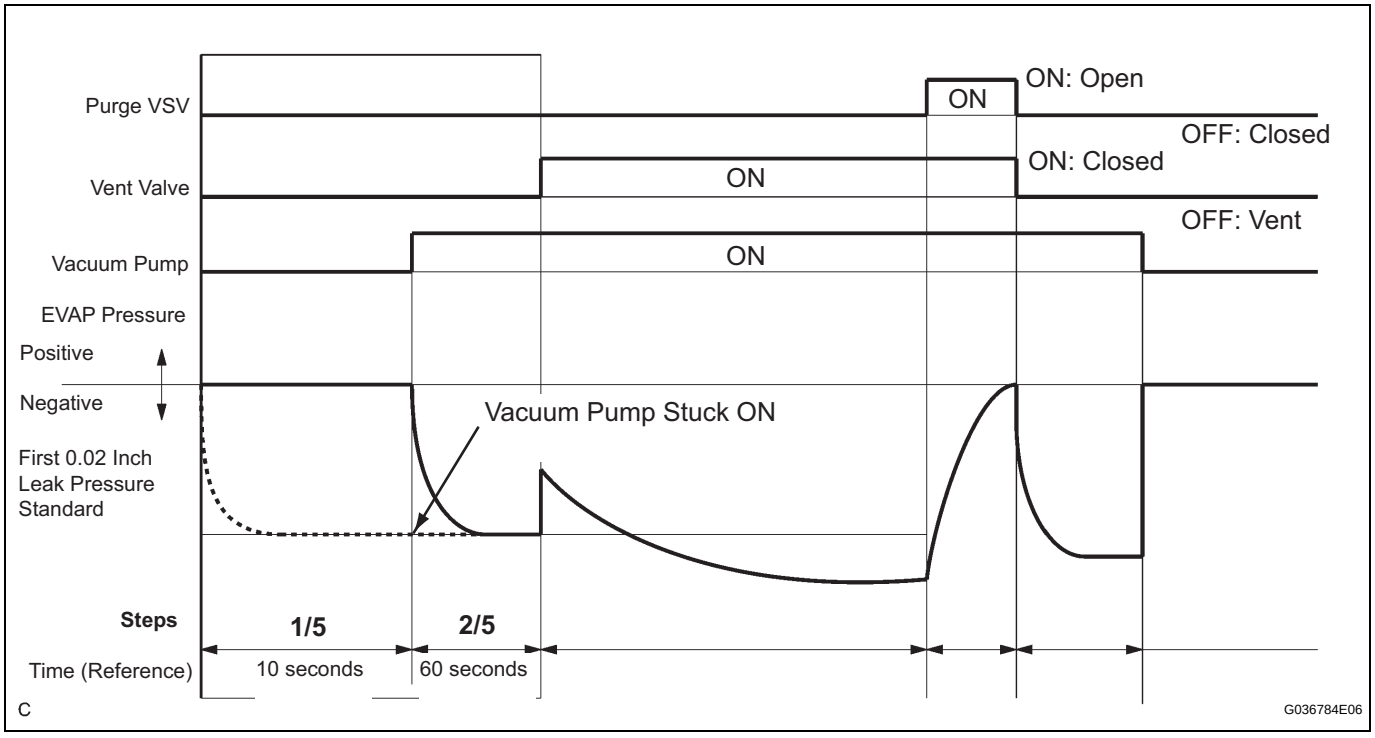

(a) Check the EVAP pressure in steps 1/5 and 2/5.

Result

DTC*	Test Result	Suspected Trouble Area	Proceed to
-	Virtually no variation in EVAP pressure during step 1/5. Then decreases to 0.02 inch leak pressure standard*	Not yet determined	A
P2402	Small difference between EVAP pressures during steps 1/5 and 2/5	Vacuum pump stuck ON	B

*: The DTCs related to the EVAP system are displayed on the intelligent tester when checking.
HINT:
The first 0.02 inch leak pressure standard is the value determined in step 2/5.

B → Go to step 23

A

6	PERFORM EVAP SYSTEM CHECK (STEP 2/5)

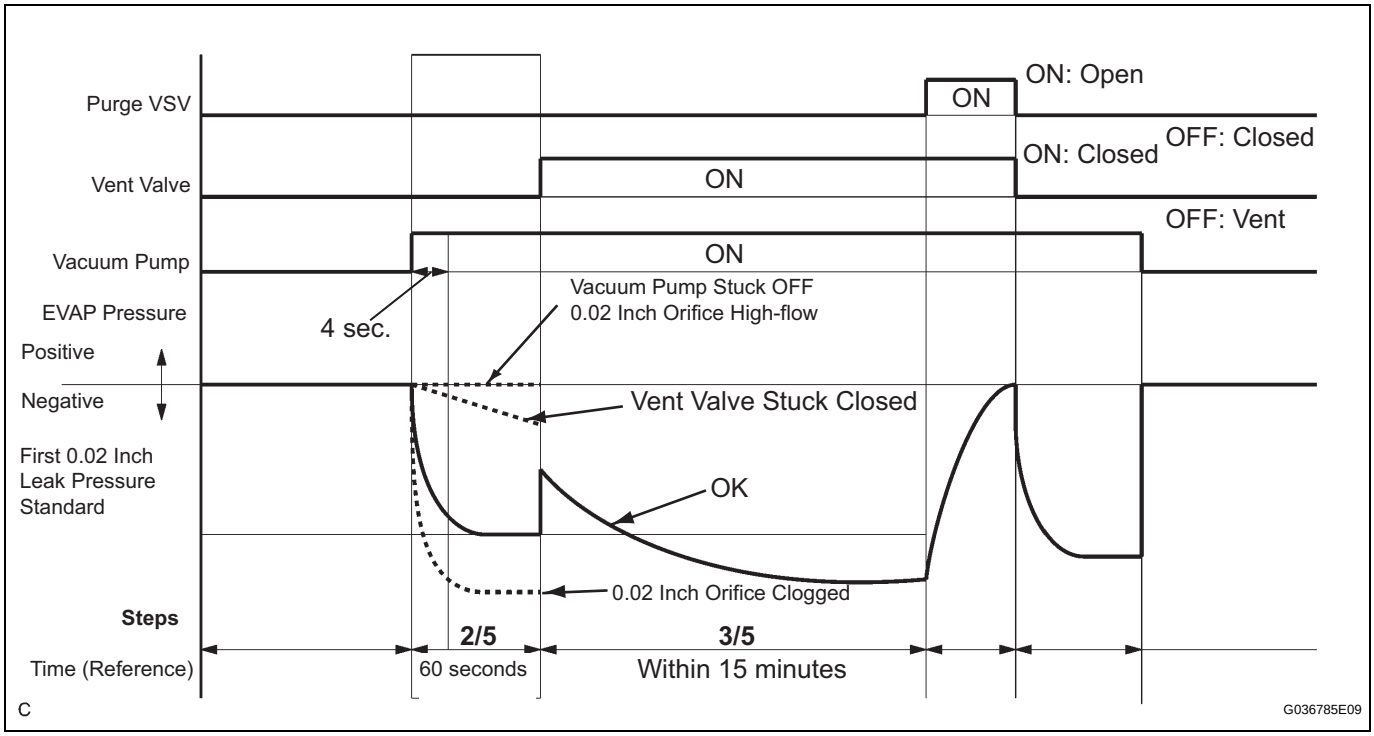

HINT:
Make a note of the pressures checked in steps (a) and (b) below.

(a) Check the EVAP pressure 4 seconds after the vacuum pump is activated*1 (Step (a)).

(b) Check the EVAP pressure again when it has stabilized. This pressure is the 0.02 inch leak pressure standard (Step (b)).

*1: The vacuum pump begins to operate at the time step 2/5 starts.

Result

DTC*2	Test Result	Suspected Trouble Area	Proceed to
-	EVAP pressure in step (b) is between -4.85 kPa and -1.06 kPa (-36.38 mmHg and -7.95 mmHg)	Not yet determined	A
P043F and P2401	EVAP pressure in step (b) is -1.06 kPa (-7.95 mmHg) or more	• 0.02 inch orifice high-flow • Vacuum pump stuck OFF	B
P043E	EVAP pressure in step (b) is less than -4.85 kPa (-36.38 mmHg)	0.02 inch orifice clogged	C
P2419	EVAP pressure in step (a) is more than -1.06 kPa (-7.95 mmHg)	Vent valve stuck closed	D

*2: The DTCs related to the EVAP system are displayed on the intelligent tester when checking.

B	Go to step 11
C	Go to step 30
D	Go to step 19

A

7	PERFORM EVAP SYSTEM CHECK (STEP 2/5 TO 3/5)

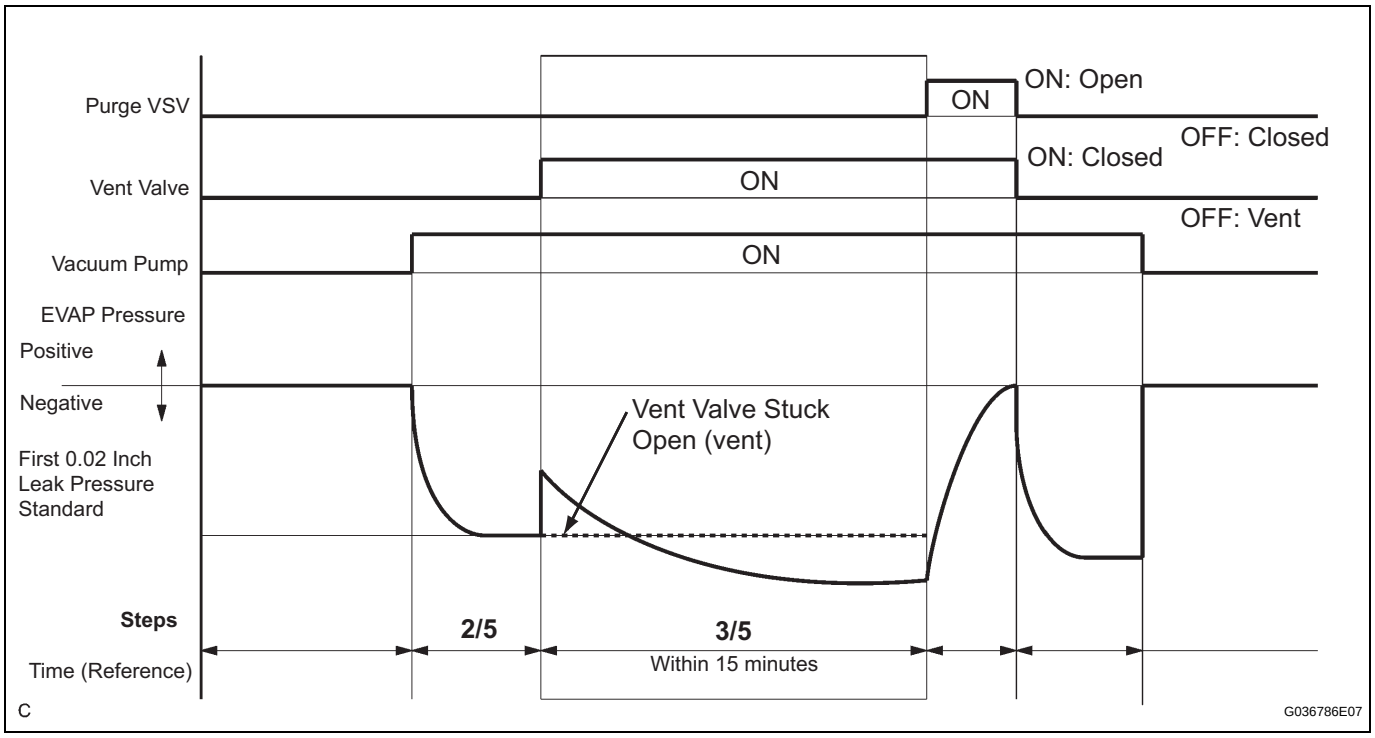

(a) Check the EVAP pressure increase in step 3/5.

Result

DTC*	Test Result	Suspected Trouble Area	Proceed to
-	EVAP pressure increases by 0.3 kPa (2.25 mmHg) or more within 10 seconds of proceeding from step 2/5 to step 3/5	Not yet determined	A
P2420	No variation in EVAP pressure even after proceeding from step 2/5 to step 3/5	Vent valve stuck open (vent)	B
P0451	No variation in EVAP pressure during steps 1/5 through 3/5	Pressure sensor malfunction	C

*: The DTCs related to the EVAP system are displayed on the intelligent tester when checking.

B	Go to step 20
C	Go to step 30

A

ES

8	PERFORM EVAP SYSTEM CHECK (STEP 3/5)

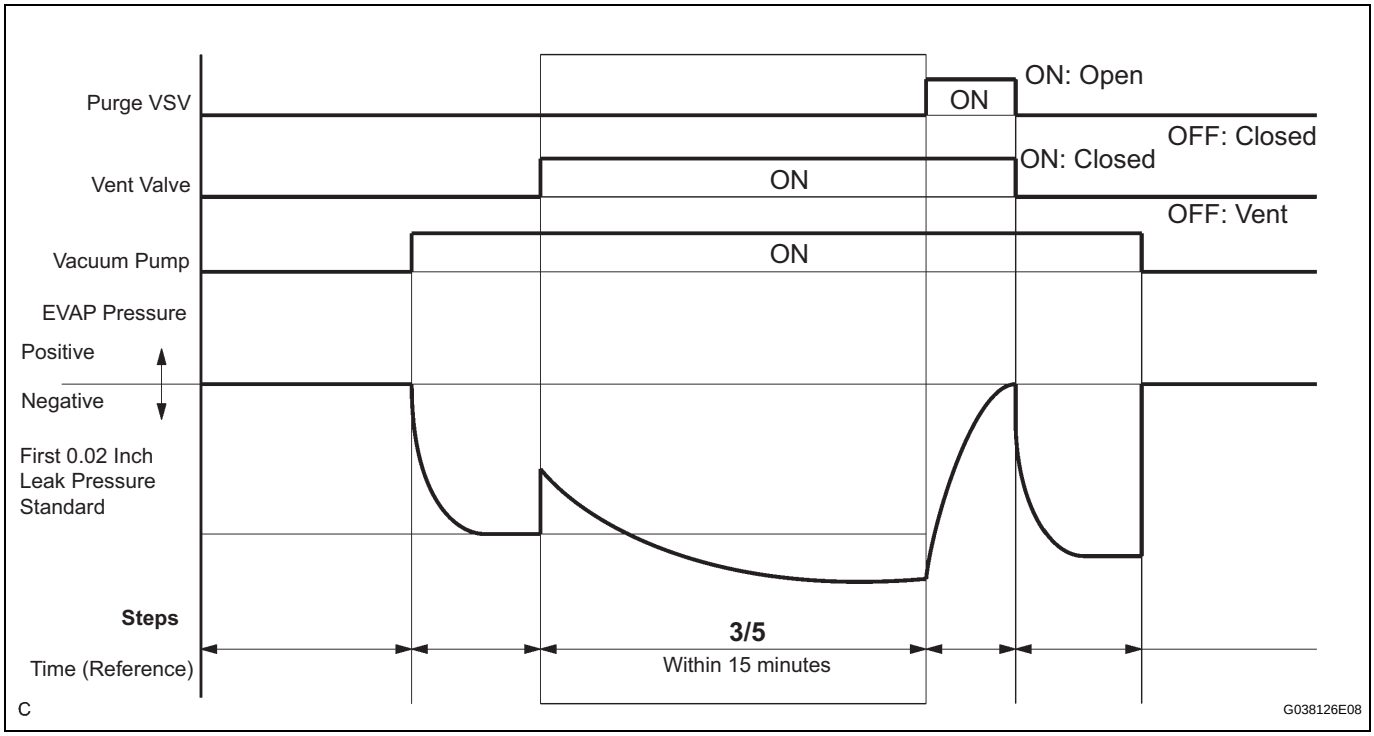

(a) Wait until the EVAP pressure change is less than 0.1 kPa (0.75 mmHg) for 30 seconds.

(b) Measure the EVAP pressure and record it.
HINT:
A few minutes are required for the EVAP pressure to become saturated. When there is little fuel in the fuel tank, it takes up to 15 minutes.

NEXT

9	PERFORM EVAP SYSTEM CHECK (STEP 4/5)

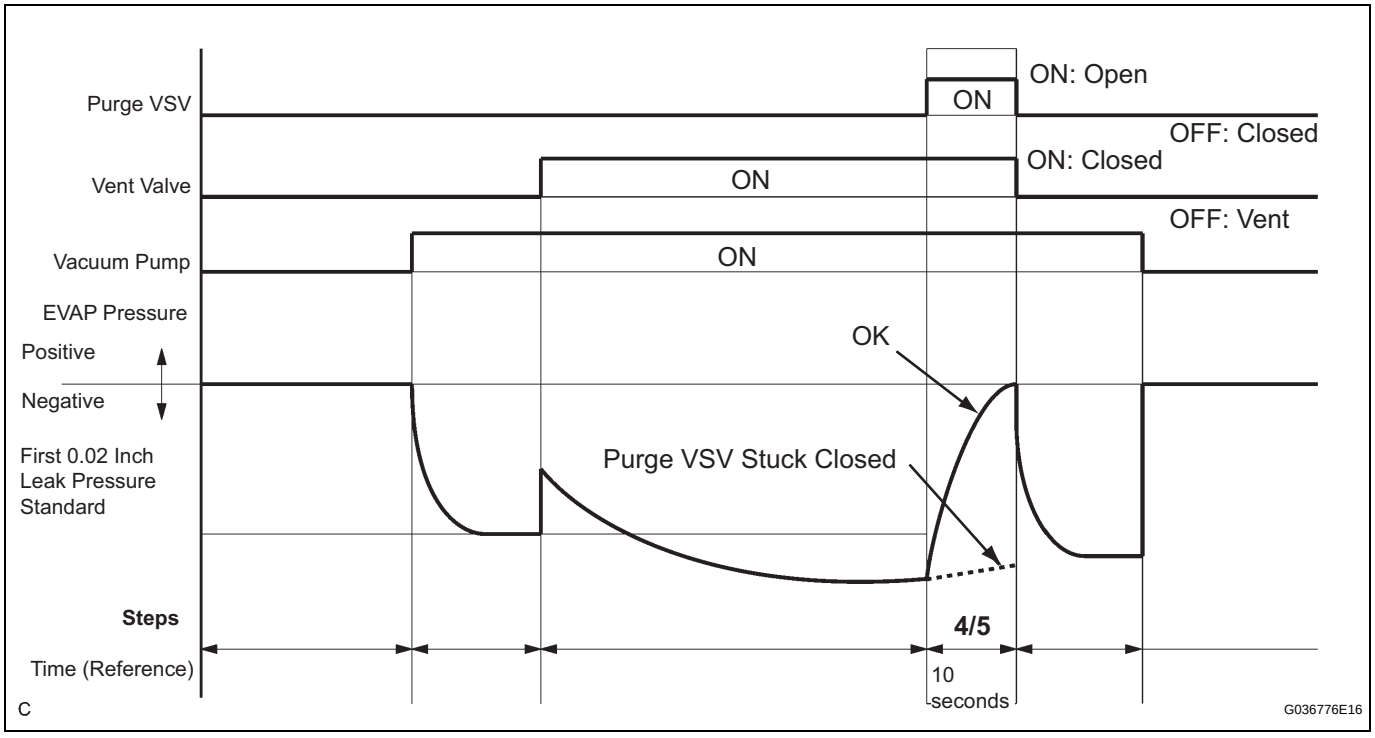

(a) Check the EVAP pressure in step 4/5.

Result

DTC*	Test Result	Suspected Trouble Area	Proceed to
-	EVAP pressure increases by 0.3 kPa (2.25 mmHg) or more within 10 seconds of proceeding from step 3/5 to step 4/5	Not yet determined	A
P0441	EVAP pressure increases by 0.3 kPa (2.25 mmHg) or more within 10 seconds of proceeding from step 3/5 to step 4/5	Problems in EVAP hose between purge VSV and intake manifold	B
P0441	Variation in EVAP pressure is less than 0.3 kPa (2.25 mmHg) for 10 seconds, after proceeding from step 3/5 to step 4/5	Purge VSV stuck closed	C

*: The DTCs related to the EVAP system are displayed on the intelligent tester when checking.

B → Go to step 15

C → Go to step 12

A

10	PERFORM EVAP SYSTEM CHECK (STEP 5/5)

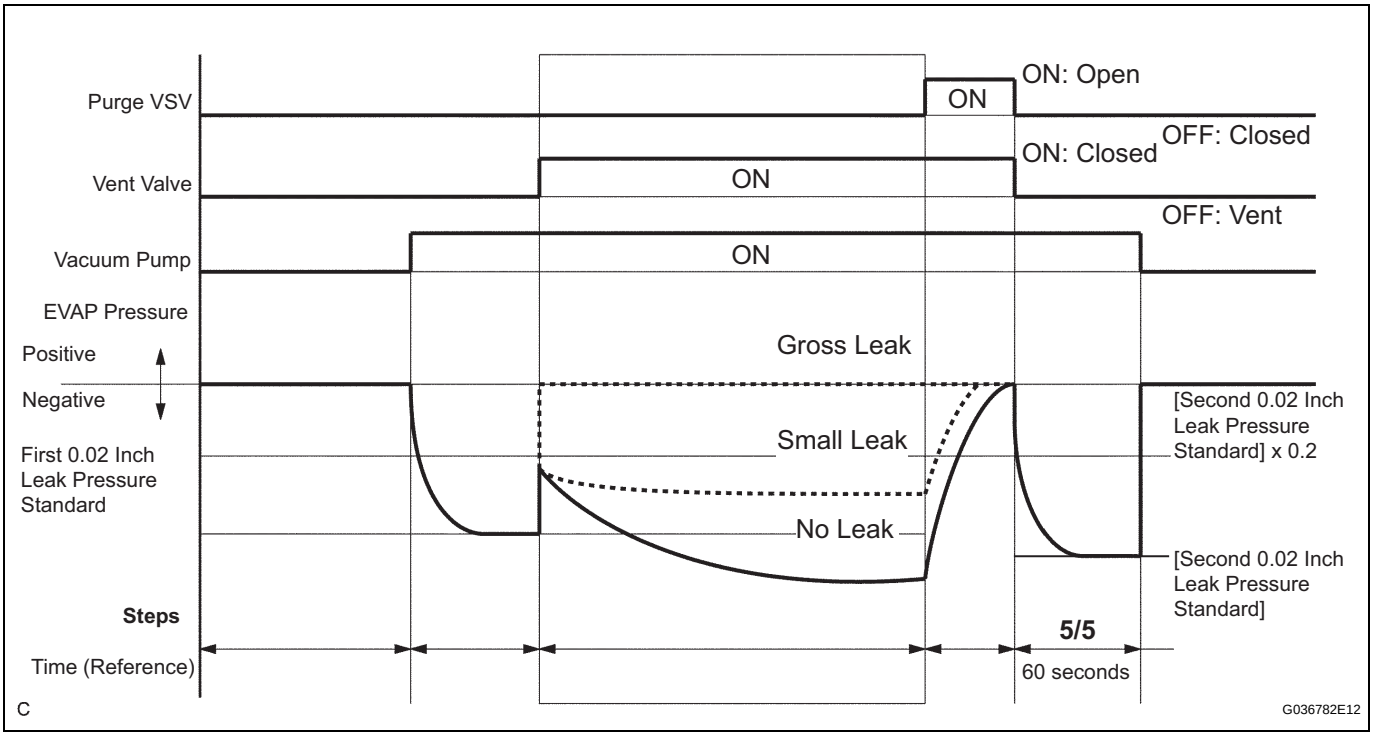

(a) Check the EVAP pressure in step 5/5.
(b) Compare the EVAP pressure in step 3/5 and the second 0.02 inch leak pressure standard (step 5/5).

Result

DTC*	Test Result	Suspected Trouble Area	Proceed to
-	EVAP pressure (step 3/5) lower than second 0.02 inch leak pressure standard (step 5/5)	Not yet determined (no leakage from EVAP system)	A
P0441 and P0455	EVAP pressure (step 3/5) higher than [second 0.02 inch leak pressure standard (step 5/5) x 0.2]	• Purge VSV stuck open • EVAP gross leak	B
P0456	EVAP pressure (step 3/5) higher than second 0.02 inch leak pressure standard (step 5/5)	EVAP small leak	B

*: The DTCs related to the EVAP system are displayed on the intelligent tester when checking.

A	Go to step 36
B	Go to step 12

11	PERFORM EVAP SYSTEM CHECK (STEP 3/5)

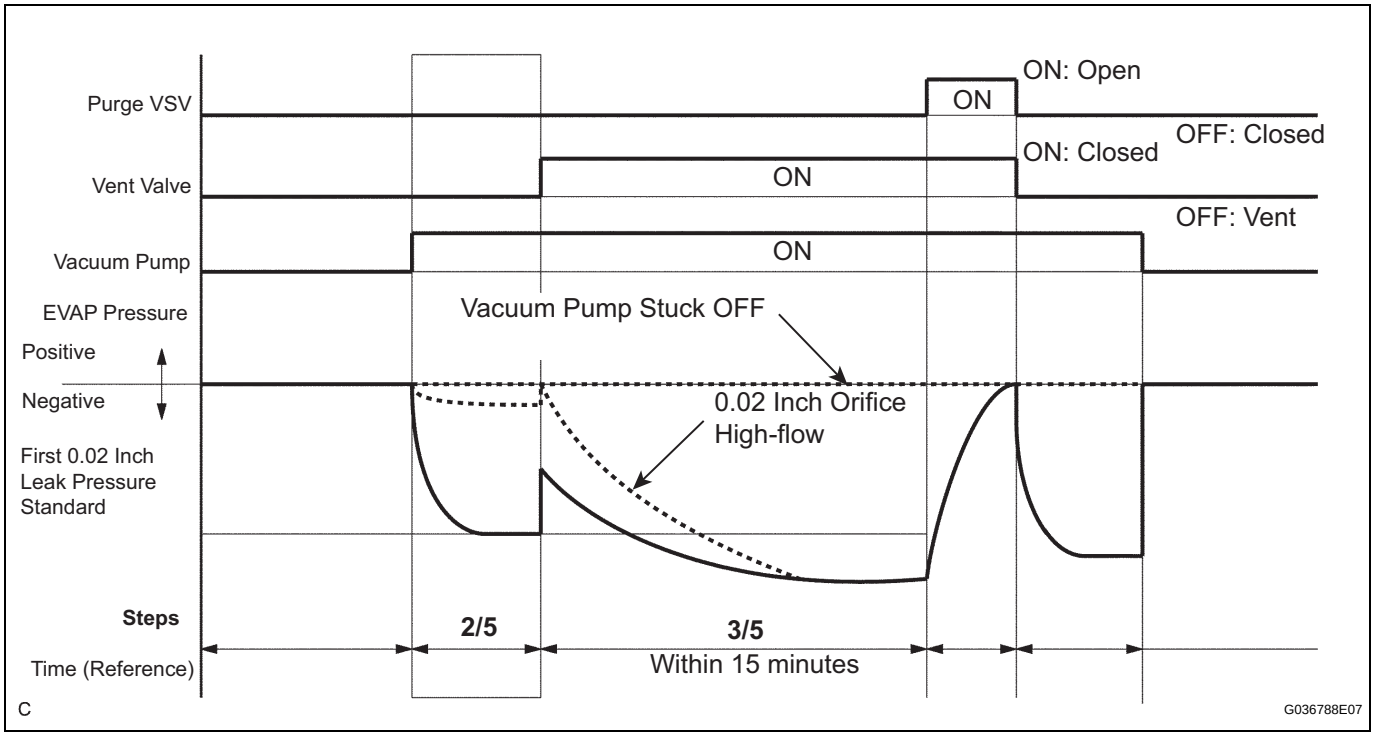

(a) Check the EVAP pressure in step 3/5.

Result

DTC*	Test Result	Suspected Trouble Area	Proceed to
P043F	EVAP pressure is less than [0.02 inch leak pressure standard] measured in step 2/5	0.02 inch orifice high-flow	A
P2401	EVAP pressure is almost the same as [0.02 inch leak pressure standard] measured in step 2/5	Vacuum pump stuck OFF	B

*: The DTCs related to the EVAP system are displayed on the intelligent tester when checking.
HINT:
The first 0.02 inch leak pressure standard is the value determined in step 2/5.

A	Go to step 30
B	Go to step 23

12	PERFORM ACTIVE TEST BY INTELLIGENT TESTER (PURGE VSV)

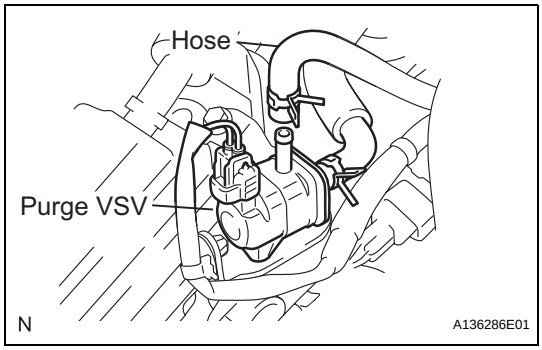

(a) Select the following menu items on the tester: DIAGNOSIS / ENHANCED OBD II / ACTIVE TEST / EVAP VSV (ALONE).
(b) Disconnect the hose (connected to the canister) from the purge VSV.
(c) Start the engine.
(d) Using the tester, turn off the purge VSV (EVAP VSV: OFF).
(e) Confirm that the purge VSV has no suction with your fingers.
(f) Using the tester, turn on the purge VSV (EVAP VSV: ON).
(g) Confirm that the purge VSV has suction with your fingers.

Result

Test Result	Suspected Trouble Area	Proceed to
No suction when purge VSV turned OFF, and suction applied when turned ON	-	A
Suction applied when purge VSV turned OFF	Purge VSV stuck open	B
No suction when purge VSV turned ON	• Purge VSV stuck closed • Problems with EVAP hose between purge VSV and throttle body	C

(h) Reconnect the hose.

B	Go to step 14
C	Go to step 15

A

13	CHECK FUEL TANK CAP ASSEMBLY

(a) Check that the fuel tank cap is correctly installed and confirm the fuel tank cap meets OEM specification.
HINT:
If an EVAP tester is available, check the fuel tank cap using the tester.
(1) Tighten the fuel tank cap
(2) Remove the fuel tank cap and install it onto the fuel tank cap adaptor.
(3) Connect the EVAP tester pump hose to the adaptor, and pressurize the cap to 3.2 to 3.7 kPa (24 to 28 mmHg) using an EVAP tester pump.
(4) Seal the adaptor and wait for 2 minutes.
(5) Check the pressure. If the pressure is 2 kPa (15 mmHg) or more, the fuel tank cap is normal.

Result

Test Result	Suspected Trouble Area	Proceed to
Fuel tank cap correctly installed	-	A
Fuel tank cap loose	• Fuel tank cap improperly installed • Defective fuel tank cap • Fuel tank cap does not meet OEM specifications	B
No fuel tank cap	-	C

A	Go to step 29
B	Go to step 27
C	Go to step 28

ES

14 INSPECT PURGE VSV

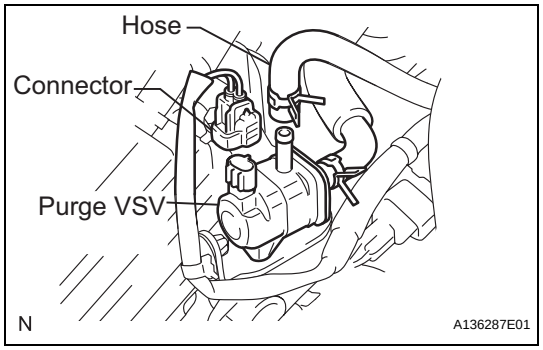

(a) Turn the ignition switch off.
(b) Disconnect the V3 purge VSV connector.
(c) Disconnect the hose (connected to the canister) from the purge VSV.
(d) Start the engine.
(e) Confirm that the purge VSV has no suction with your fingers.

Result

Test Result	Suspected Trouble Area	Proceed to
No suction	ECM	A
Suction applied	Purge VSV	B

(f) Reconnect the purge VSV connector.
(g) Reconnect the hose.

A	Go to step 35
B	Go to step 31

15 CHECK EVAP HOSE (PURGE VSV - THROTTLE BODY)

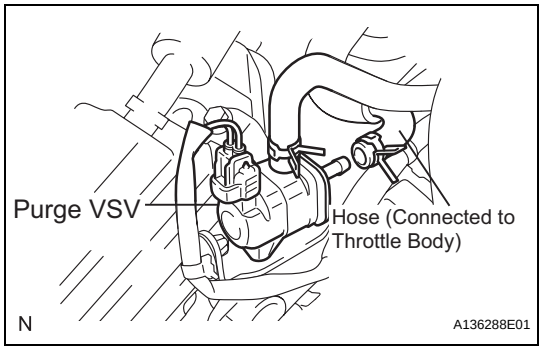

(a) Disconnect the hose (connected to the throttle body) from the purge VSV.
(b) Start the engine.
(c) Confirm that the hose has suction with your fingers.

Result

Test Result	Suspected Trouble Area	Proceed to
Suction applied	-	A
No suction	• Throttle body • EVAP hose between purge VSV and throttle body	B

(d) Reconnect the hose.

B	Go to step 26

A

16 INSPECT VACUUM SWITCHING VALVE NO. 1 (PURGE VSV)

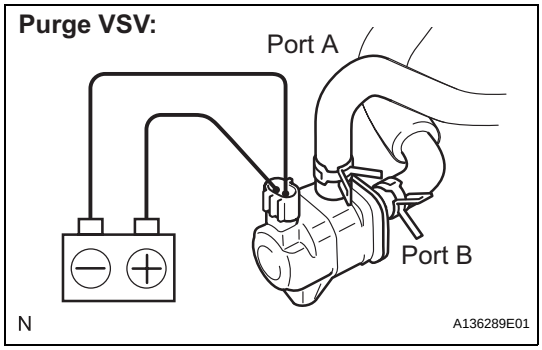

(a) Remove the purge VSV.
(b) Apply battery voltage to the terminals of the purge VSV.
(c) Using compressed air, confirm that air flows from port A to port B.

Result

Test Result	Suspected Trouble Area	Proceed to
Air flows	-	A
No air flow	Purge VSV	B

(d) Install the purge VSV.

B → **Go to step 31**

A

17 CHECK HARNESS AND CONNECTOR (POWER SOURCE OF PURGE VSV)

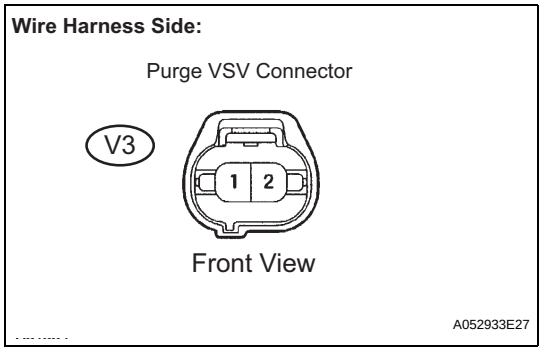

(a) Disconnect the V3 purge VSV connector.
(b) Turn the ignition switch to the ON position.
(c) Measure the voltage between terminal 1 of the purge VSV connector and body ground.

Result

Test Result	Suspected Trouble Area	Proceed to
Between 11 V and 14 V	-	A
Other than result above	Wire harness or connectors between purge VSV and ECM	B

(d) Reconnect the purge VSV connector.

B → **Go to step 32**

A

18 CHECK HARNESS AND CONNECTOR (PURGE VSV - ECM)

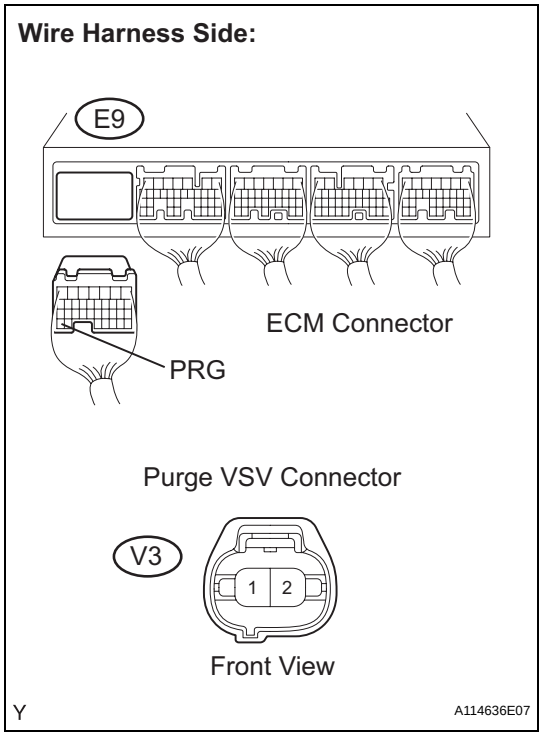

(a) Disconnect the E9 ECM connector and the V3 purge VSV connector.
(b) Measure the resistance between the terminals of the purge VSV connector and ECM connector.
Standard resistance

Tester Connection	Specified Condition
E9-34 (PRG) - V3-2	Below 1 Ω
E9-34 (PRG) - Body ground	10 kΩ or higher
V3-1 - Body ground	10 kΩ or higher

(c) Reconnect the purge VSV connector.
(d) Reconnect the ECM connector.

OK	Go to step 35
NG	Go to step 32

ES

19 PERFORM ACTIVE TEST BY INTELLIGENT TESTER (FOR VENT VALVE)

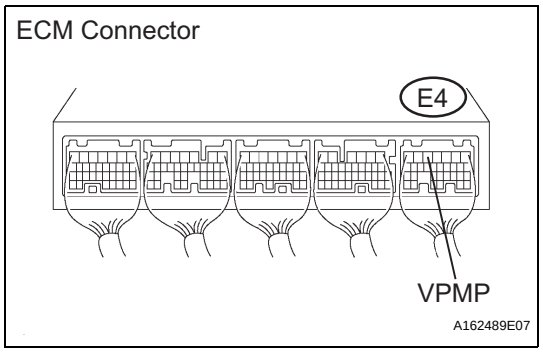

(a) Turn the ignition switch to the ON position.
(b) Select the following menu items on the tester: DIAGNOSIS / ENHANCED OBD II / ACTIVE TEST / VENT VALVE.
(c) Measure the voltage between terminal VPMP of the ECM connector and body ground when the vent valve is turned ON (close) and OFF (vent) using the tester.
Result

Test Result	Suspected Trouble Area	Proceed to
Between 9 V and 14 V when OFF Below 3 V when ON	Vent valve	A
Below 3 V when OFF and ON	ECM	B

A	Go to step 22
B	Go to step 35

20	PERFORM ACTIVE TEST BY INTELLIGENT TESTER (FOR VENT VALVE)

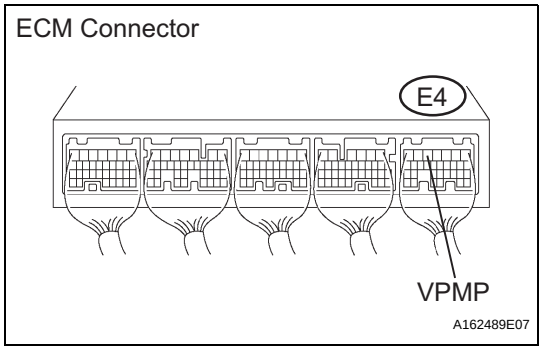

(a) Turn the ignition switch to the ON position.
(b) Select the following menu items on the tester: DIAGNOSIS / ENHANCED OBD II / ACTIVE TEST / VENT VALVE (ALONE).
(c) Measure the voltage between terminal VPMP of the ECM connector and body ground when the vent valve is turned ON (close) and OFF (vent) using the tester.

Result

Test Result	Suspected Trouble Area	Proceed to
Below 3 V when OFF and ON	Power source of vent valve	A
Between 9 V and 14 V when OFF Below 3 V when ON	Vent valve	B
Between 9 V and 14 V when OFF and ON	ECM	C

B → Go to step 22

C → Go to step 35

A

21 INSPECT PUMP MODULE (POWER SOURCE FOR VENT VALVE)

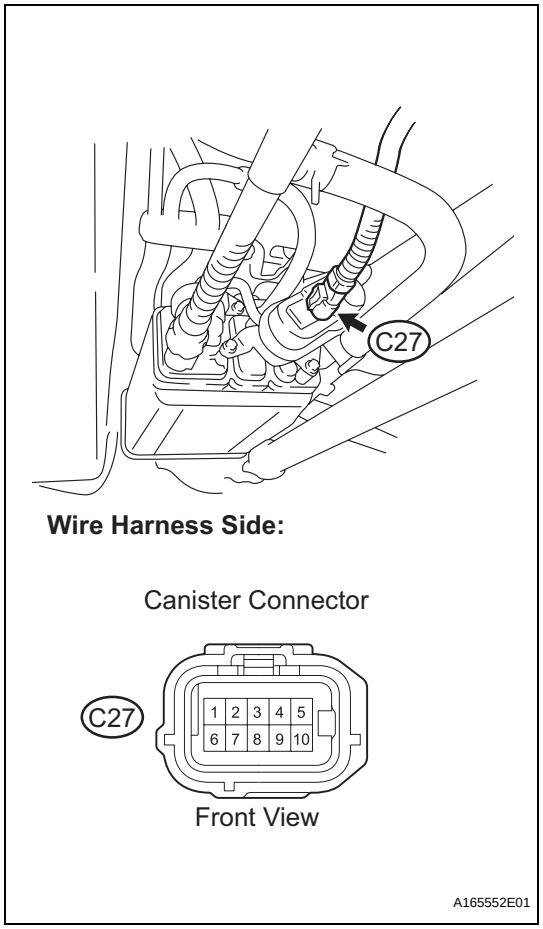

(a) Turn the ignition switch off.
(b) Disconnect the C27 canister connector.
(c) Turn the ignition switch to the ON position.
(d) Measure the voltage between terminal 9 of the canister connector and body ground.

Result

Test Result	Suspected Trouble Area	Proceed to
Between 9 V and 14 V	-	A
Between 0 V and 3 V	Power source wire harness of vent valve	B

(e) Reconnect the canister connector.

B → **Go to step 32**

A

22 INSPECT PUMP MODULE (VENT VALVE OPERATION)

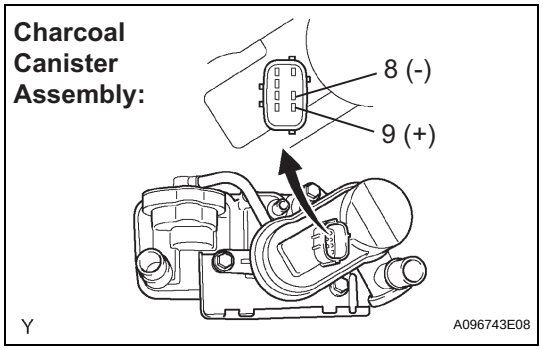

(a) Turn the ignition switch off.
(b) Disconnect the C27 canister connector.
(c) Apply the battery voltage to terminals 9 and 8 of the pump module.
(d) Touch the pump module to confirm the vent valve operation.

Result

Test Result	Suspected Trouble Area	Proceed to
Operating	Wire harness between vent valve and ECM	A
Not operating	Vent valve	B

(e) Reconnect the canister connector.

A → **Go to step 32**

B → **Go to step 30**

ES

23	PERFORM ACTIVE TEST BY INTELLIGENT TESTER (FOR PUMP MODULE (VACUUM PUMP))

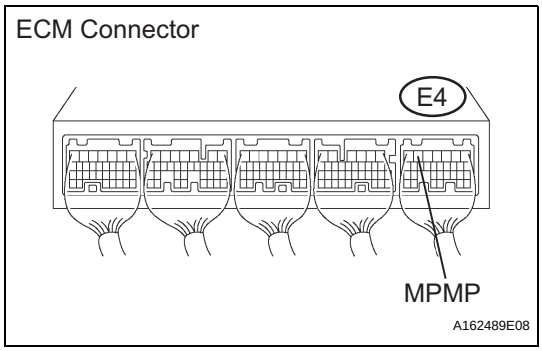

(a) Select the following menu items on the tester: DIAGNOSIS / ENHANCED OBD II / ACTIVE TEST / VACUUM PUMP.
(b) Measure the voltage between terminal MPMP of the ECM connector and body ground when the vacuum pump is turned ON and OFF using the tester.

Result

Test Result	Suspected Trouble Area	Proceed to
Between 0 V and 3 V when OFF Between 9 V and 14 V when ON	-	A
Between 9 V and 14 V when OFF Between 0 V and 3 V when ON	ECM	B

B → Go to step 35

A

24	CHECK HARNESS AND CONNECTOR (PUMP MODULE - ECM)

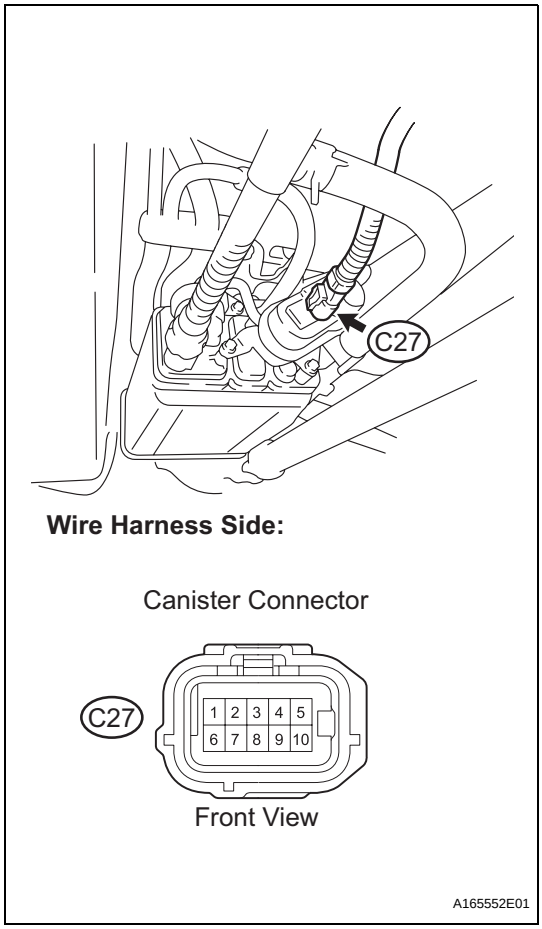

(a) Turn the ignition switch off.
(b) Disconnect the C27 canister connector.
(c) Turn the ignition switch to the ON position.
(d) Select the following menu items on the tester: DIAGNOSIS / ENHANCED OBD II / ACTIVE TEST / VACUUM PUMP.
(e) Turn the vacuum pump ON.
(f) Measure the voltage between terminal 1 of the canister connector and body ground.

Result

Test Result	Suspected Trouble Area	Proceed to
Between 9 V and 14 V	-	A
Between 0 V and 3 V	Wire harness between ECM and vacuum pump	B

(g) Reconnect the canister connector.

B → Go to step 32

A

25 CHECK HARNESS AND CONNECTOR (PUMP MODULE - BODY GROUND)

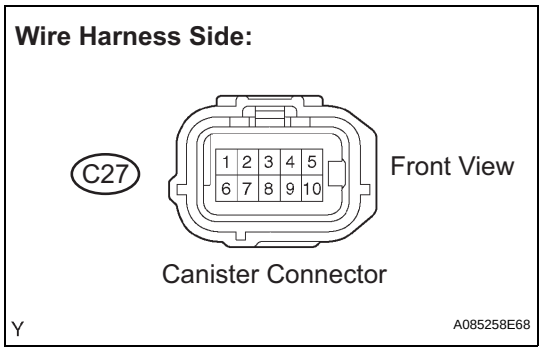

(a) Disconnect the C27 canister connector.
(b) Turn the ignition switch off.
(c) Check the resistance between terminal 6 of the canister connector and body ground.

Result

Test Result	Suspected Trouble Area	Proceed to
Below 1 Ω	Vacuum Pump	A
10 kΩ or higher	Wire harness between vacuum pump and body ground	B

(d) Reconnect the canister connector.

A	Go to step 30
B	Go to step 32

ES

26 INSPECT THROTTLE BODY

(a) Stop the engine.
(b) Disconnect the EVAP hose from the throttle body.
(c) Start the engine.
(d) Confirm that the port of the throttle body has suction with your fingers.

Result

Test Result	Suspected Trouble Area	Proceed to
Suction applied	EVAP hose between throttle body and purge VSV	A
No suction	Throttle body	B

(e) Reconnect the EVAP hose.

A	Go to step 33
B	Go to step 34

27 CORRECTLY REINSTALL OR REPLACE FUEL TANK CAP

HINT:
- When reinstalling the fuel tank cap, tighten it until a few click sounds are heard.
- When replacing the fuel tank cap, use a fuel tank cap that meets OEM specifications, and tighten it until a few click sounds are heard.

NEXT	Go to step 37

28	REPLACE FUEL TANK CAP ASSEMBLY

HINT:
When installing the fuel tank cap, tighten it until a few click sounds are heard.

NEXT → Go to step 37

29	LOCATE EVAP LEAK

ES

(a) Disconnect the vent hose.

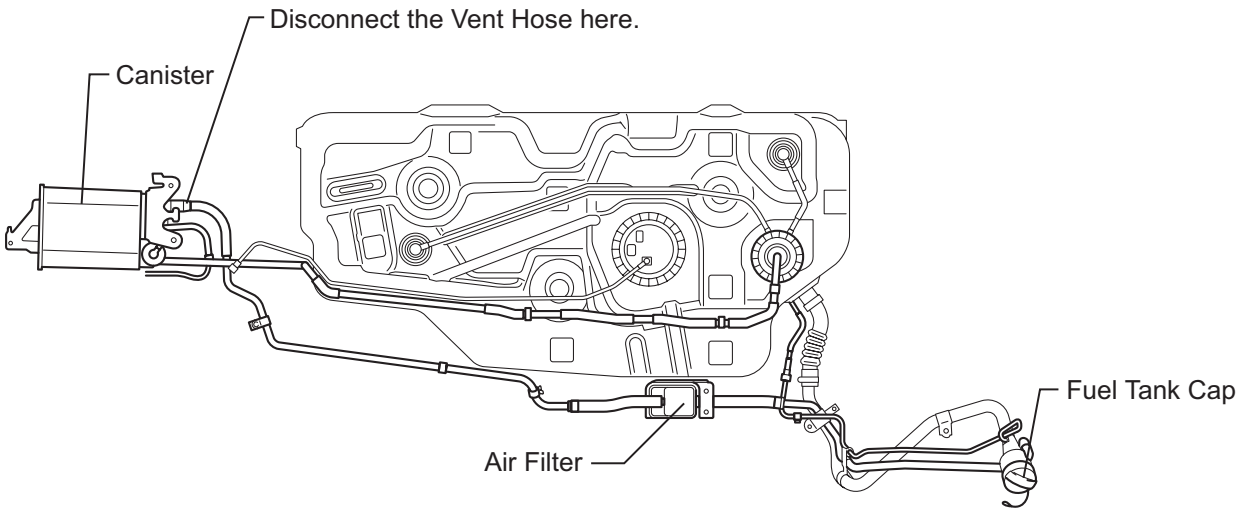

N

A163294E02

(b) Connect the EVAP pressure tester tool to the canister with the adapter.

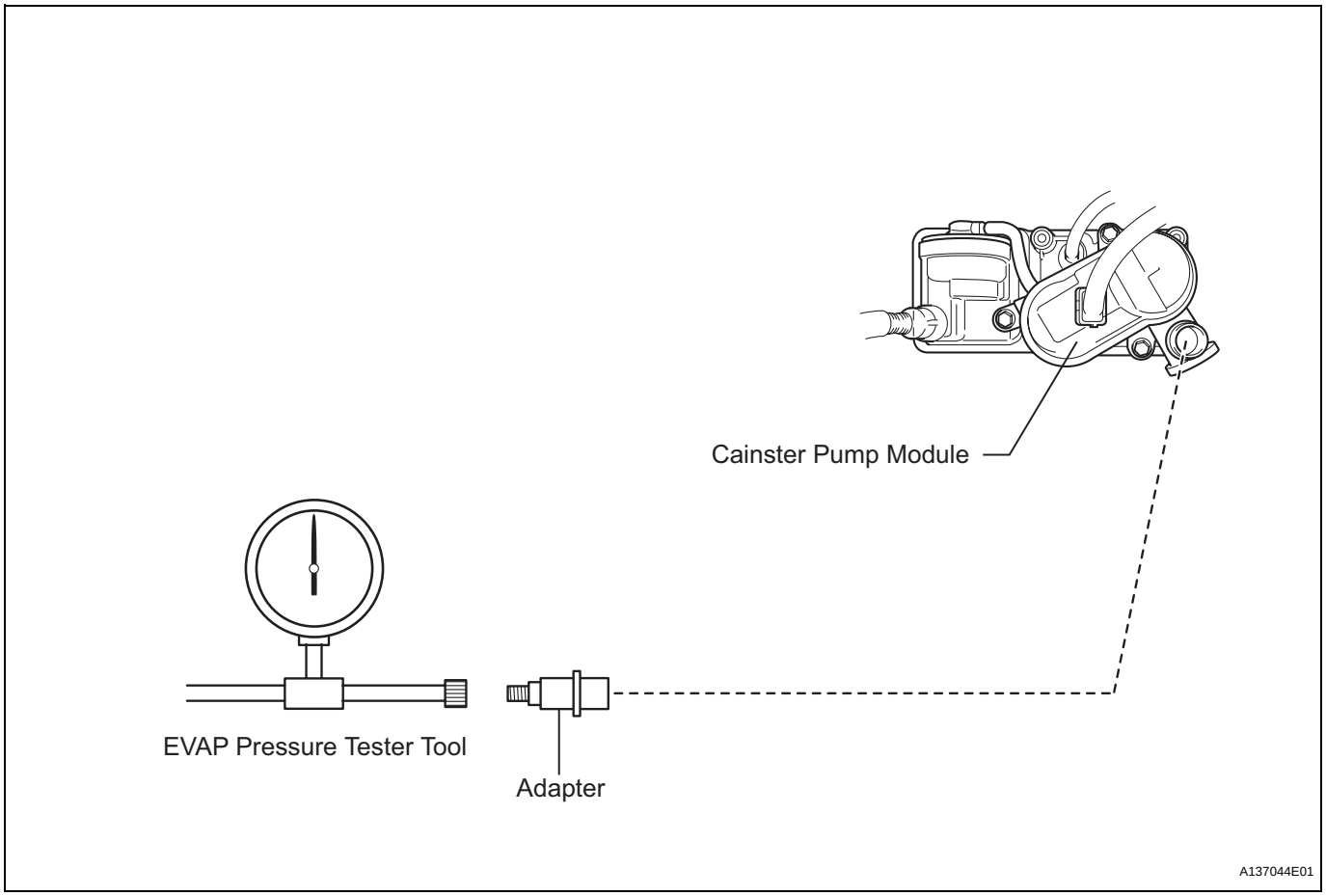

(c) Pressurize the EVAP system by 3.2 to 3.7 kPa (24 to 28 mmHg).
(d) Apply soapy water to the piping and the connecting parts of the EVAP system.
(e) Look for areas where bubbles appear. This indicates a leak point.
(f) Repair or replace the leak point.

NEXT	Go to step 37

30	REPLACE CHARCOAL CANISTER ASSEMBLY

(a) Replace the charcoal canister assembly (See page EC-8).

NOTICE:
When replacing the canister, check the canister pump module interior and related pipes for water, fuel and other liquids. If liquids are present, check for disconnections and/or cracks in the following: 1) the pipe from the air inlet port to the canister pump module; 2) the canister filter; 3) the fuel tank vent hose.

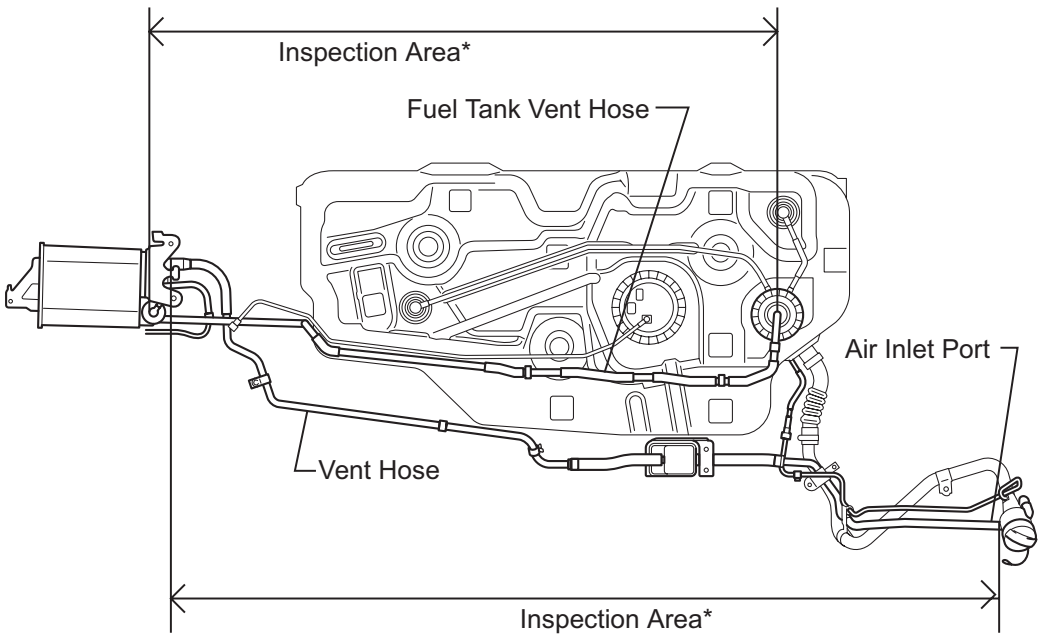

*: Check for Disconnection and/or cracks

N

A163294E01

NEXT → Go to step 37

31 REPLACE VACUUM SWITCHING VALVE NO. 1 (PURGE VSV)

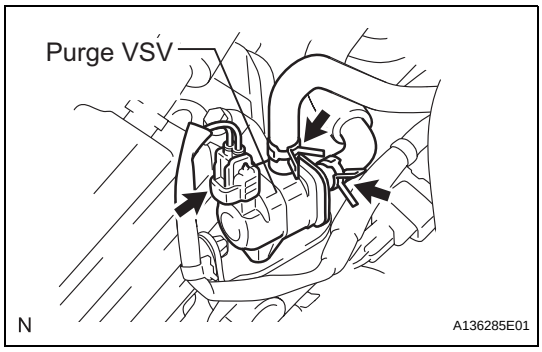

N

A136285E01

(a) Disconnect the connector and 2 hoses from the purge VSV.
(b) Remove the purge VSV.
(c) Install a new purge VSV.
(d) Reconnect the connector and 2 hoses.

NEXT → Go to step 37

32 REPAIR OR REPLACE HARNESS OR CONNECTOR

NEXT → Go to step 37

33 REPLACE EVAP HOSE (THROTTLE BODY - PURGE VSV)

NEXT → Go to step 37

34	INSPECT THROTTLE BODY

(a) Remove the throttle body (See page ES-493).
(b) Check that the EVAP purge port of the throttle body is not clogged. If necessary, replace the throttle body.

NEXT → Go to step 37

35	REPLACE ECM

(a) Replace the ECM (See page ES-498).

NEXT → Go to step 37

36	REPAIR OR REPLACE PARTS AND COMPONENTS INDICATED BY OUTPUT DTCS

(a) Repair the malfunctioning areas indicated by the DTCs that had been confirmed when the vehicle was brought in.

NEXT

37	PERFORM EVAP SYSTEM CHECK (AUTO OPERATION)

NOTICE:

- **In the EVAP SYSTEM CHECK (AUTO OPERATION), the series of 5 EVAP SYSTEM CHECK steps are performed automatically. It takes a maximum of approximately 18 minutes.**
- **Do not perform the EVAP SYSTEM CHECK when the fuel tank is more than 90% full because the cut-off valve may be closed, making the leak check of the fuel tank unavailable.**
- **Do not run the engine in this step.**
- **When the temperature of the fuel is 35°C (95°F) or more, a large amount of vapor forms and any check results become inaccurate. When performing an EVAP SYSTEM CHECK, keep the temperature below 35°C (95°F).**

(a) Clear the DTCs (See page ES-39).
(b) On the intelligent tester, select the following menu items: DIAGNOSIS / ENHANCED OBD II / SYSTEM CHECK / EVAP SYS CHECK / AUTO OPERATION.
(c) After the SYSTEM CHECK is completed, check for pending DTCs by selecting the following menu items: DIAGNOSIS / ENHANCED OBD II / DTC INFO / PENDING CODES.
HINT:
If no pending DTC is found, the repair has been successfully completed.

NEXT

COMPLETED