ECM Power Source Circuit

DESCRIPTION

When the ignition switch is turned to the ON position, the battery voltage is applied to terminal IGSW of the ECM. The ECM MREL output signal causes a current to flow to the coil, closing the contacts of the EFI relay and supplying power to terminal +B of the ECM.
If the ignition switch is turned off, the ECM holds the EFI relay ON for a maximum of 2 seconds to allow for the initial setting of the throttle valve.

WIRING DIAGRAM

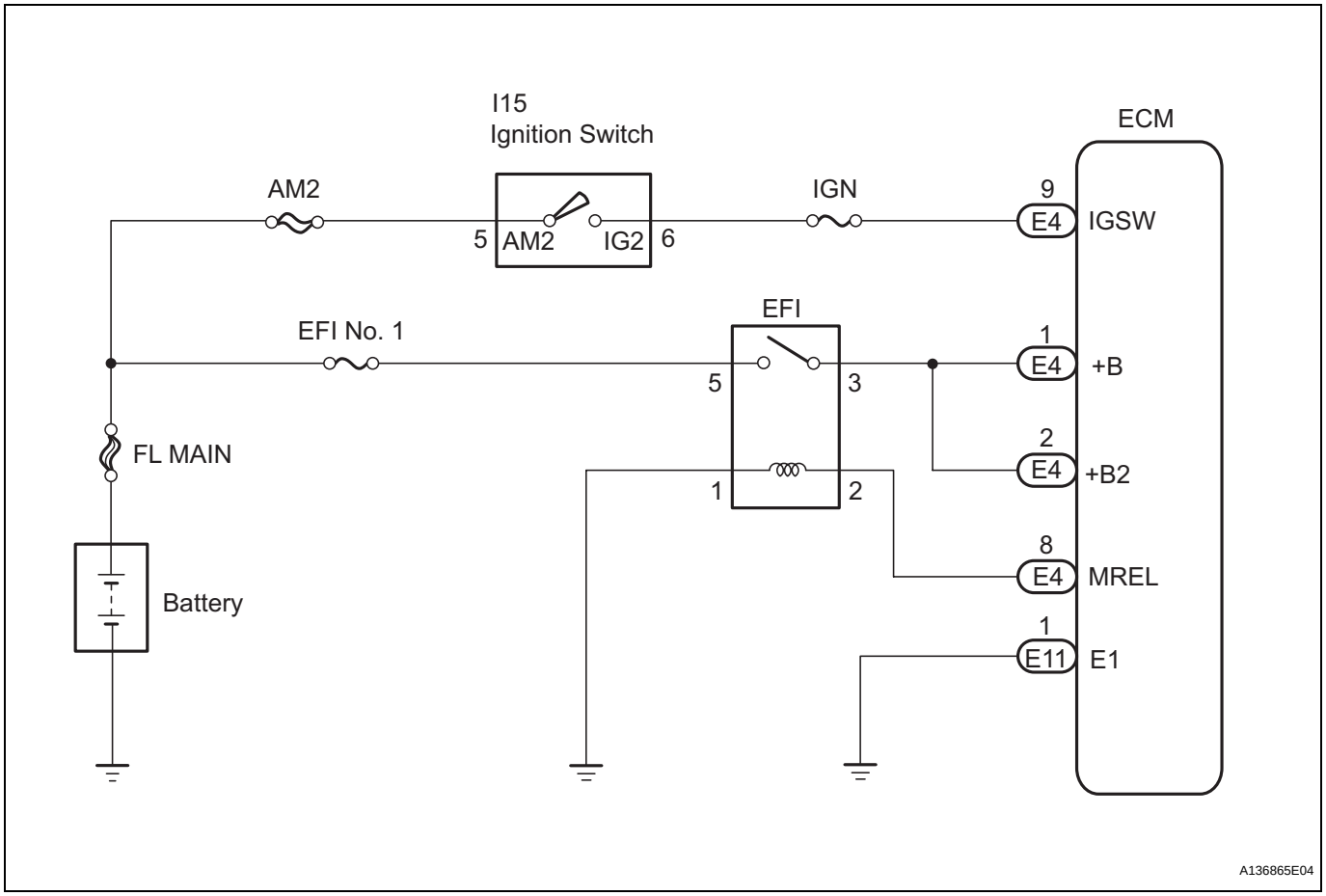

ES

INSPECTION PROCEDURE

1 INSPECT ECM (+B VOLTAGE)

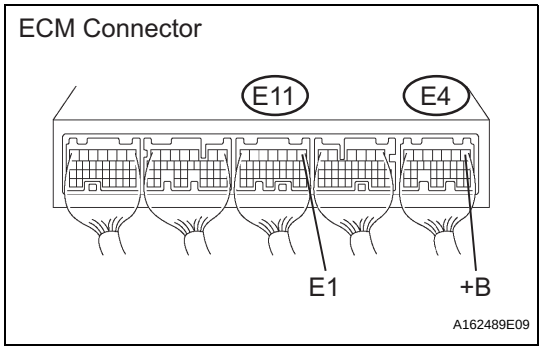

(a) Turn the ignition switch to the ON position.
(b) Measure the voltage according to the value(s) in the table below.
Standard voltage

Tester Connection	Specified Condition
+B (E4-1) - E1 (E11-1)	9 to 14 V

OK → **PROCEED TO NEXT CIRCUIT INSPECTION SHOWN IN PROBLEM SYMPTOMS TABLE**

NG

2 CHECK HARNESS AND CONNECTOR (ECM - BODY GROUND)

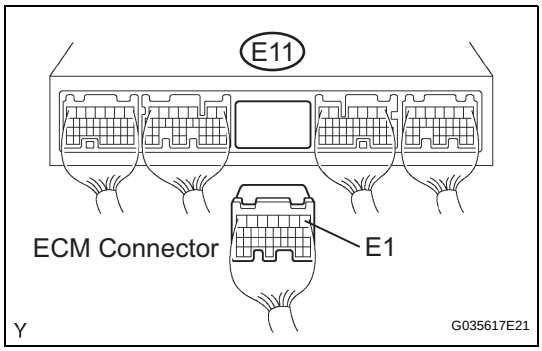

(a) Disconnect the E11 ECM connector.
(b) Measure the resistance according to the value(s) in the table below.
Standard resistance:
Check for open

Tester Connection	Specified Condition
E1 (E11-1) - Body ground	Below 1 Ω

(c) Reconnect the ECM connector.

NG → **REPAIR OR REPLACE HARNESS OR CONNECTOR (ECM - BODY GROUND)**

OK

3 INSPECT ECM (IGSW VOLTAGE)

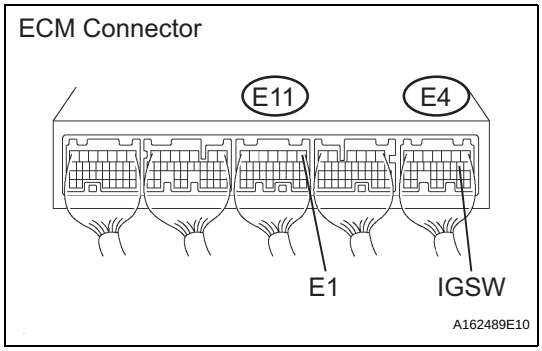

(a) Turn the ignition switch to the ON position.
(b) Measure the voltage according to the value(s) in the table below.
Standard voltage

Tester Connection	Specified Condition
IGSW (E4-9) - E1 (E11-1)	9 to 14 V

OK → **Go to step 8**

NG

4 CHECK FUSE (IGN FUSE)

Driver Side Junction Block:

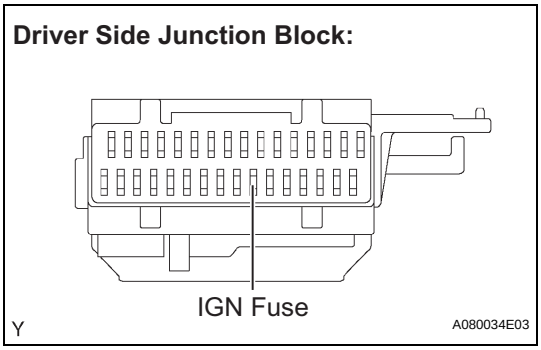

(a) Remove the IGN fuse from the driver side junction block.
(b) Measure the IGN fuse resistance.
Standard resistance:
Below 1 Ω
(c) Reinstall the IGN fuse.

NG → **REPLACE FUSE (IGN FUSE)**

OK

5 CHECK HARNESS AND CONNECTOR (IGNITION SWITCH - ECM)

Wire Harness Side:

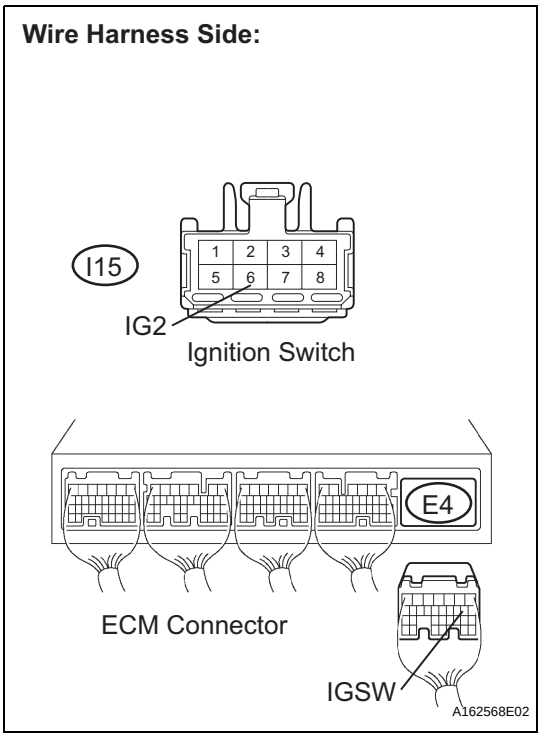

(a) Disconnect the E4 ECM connector.
(b) Disconnect the I15 ignition switch connector.
(c) Measure the resistance according to the value(s) in the table below.
Standard resistance:
Check for open

Tester Connection	Specified Condition
IG2 (I15-6) - IGSW (E4-9)	Below 1 Ω

Check for short

Tester Connection	Specified Condition
IG2 (I15-6) or IGSW (E4-9) - Body ground	10 kΩ or higher

(d) Reconnect the ECM connector.
(e) Reconnect the ignition switch connector.

NG → **REPAIR OR REPLACE HARNESS OR CONNECTOR (IGNITION SWITCH - ECM)**

OK

6 INSPECT IGNITION SWITCH ASSEMBLY

(a) Inspect the ignition or starter switch assembly (See page ST-16).

NG → **REPLACE IGNITION SWITCH ASSEMBLY (See page ST-16)**

OK

7	CHECK FUSE (AM2 FUSE)

Engine Room Junction Block:

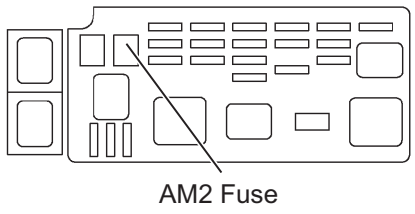

(a) Remove the AM2 fuse from the engine room junction block.
(b) Measure the resistance according to the value(s) in the table below.
Standard resistance:
Below 1 Ω
(c) Reinstall the AM2 fuse

NG → **REPLACE FUSE (AM2 FUSE)**

OK

REPAIR OR REPLACE HARNESS OR CONNECTOR (IGNITION SWITCH - BATTERY)

8	INSPECT ECM (MREL VOLTAGE)

ECM Connector

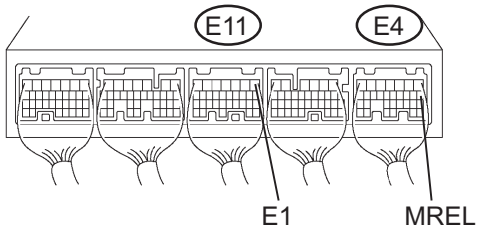

(a) Turn the ignition switch to the ON position.
(b) Measure the voltage according to the value(s) in the table below.
Standard voltage

Tester Connection	Specified Condition
MREL (E4-8) - E1 (E11-1)	9 to 14 V

NG → **REPLACE ECM (See page ES-498)**

OK

9	CHECK FUSE (EFI NO.1 FUSE)

Engine Room Junction Block:

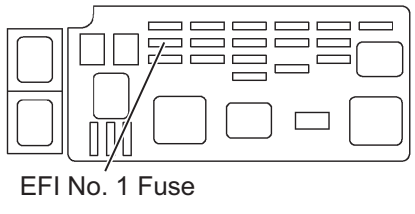

(a) Remove the EFI No. 1 fuse from the engine room junction block.
(b) Measure the EFI No. 1 fuse resistance.
Standard resistance:
Below 1 Ω
(c) Reinstall the EFI No. 1 fuse.

NG → **REPLACE FUSE (EFI NO.1 FUSE)**

OK

10 INSPECT RELAY (EFI RELAY)

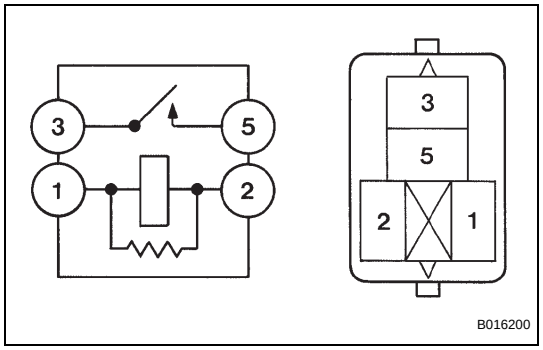

(a) Remove the EFI relay from the engine room junction block.
(b) Measure the EFI relay resistance.
Standard resistance

Tester Connection	Specified Condition
3 - 5	10 kΩ or higher
3 - 5	Below 1 Ω (when battery voltage applied to terminals 1 and 2)

(c) Reinstall the EFI relay.

NG → **REPLACE RELAY (EFI RELAY)**

OK

11 CHECK HARNESS AND CONNECTOR (EFI RELAY - ECM)

Engine Room Junction Block:

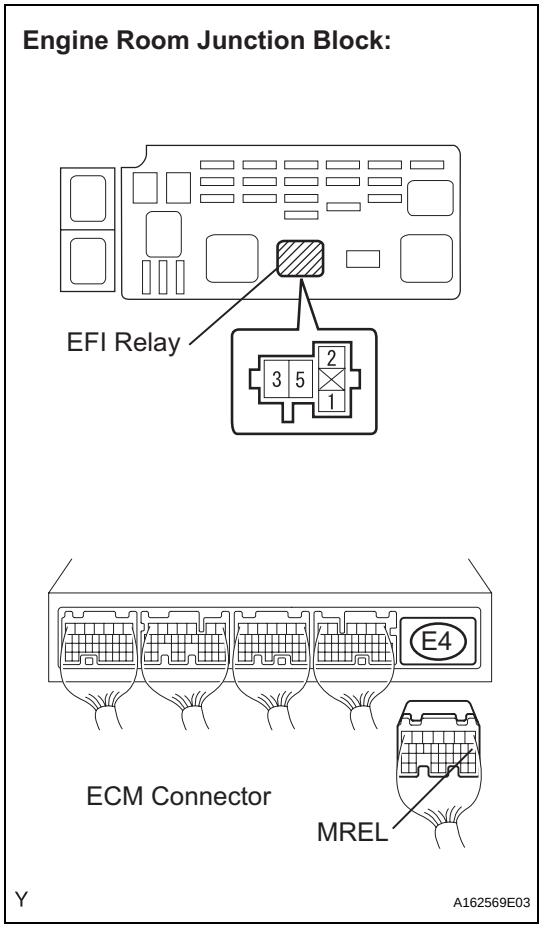

(a) Check the harness and connector between the EFI relay and ECM.
(1) Remove the EFI relay from the engine room junction block.
(2) Disconnect the E4 ECM connector.
(3) Measure the resistance according to the value(s) in the table below.
Standard resistance:
Check for open

Tester Connection	Specified Condition
EFI relay terminal (2) - MREL (E4-8)	Below 1 Ω

Check for short

Tester Connection	Specified Condition
EFI relay terminal (2) or MREL (E4-8) - Body ground	10 kΩ or higher

NG → **REPAIR OR REPLACE HARNESS OR CONNECTOR (EFI RELAY - ECM)**

OK

ES

12	CHECK HARNESS AND CONNECTOR (EFI RELAY - ECM)

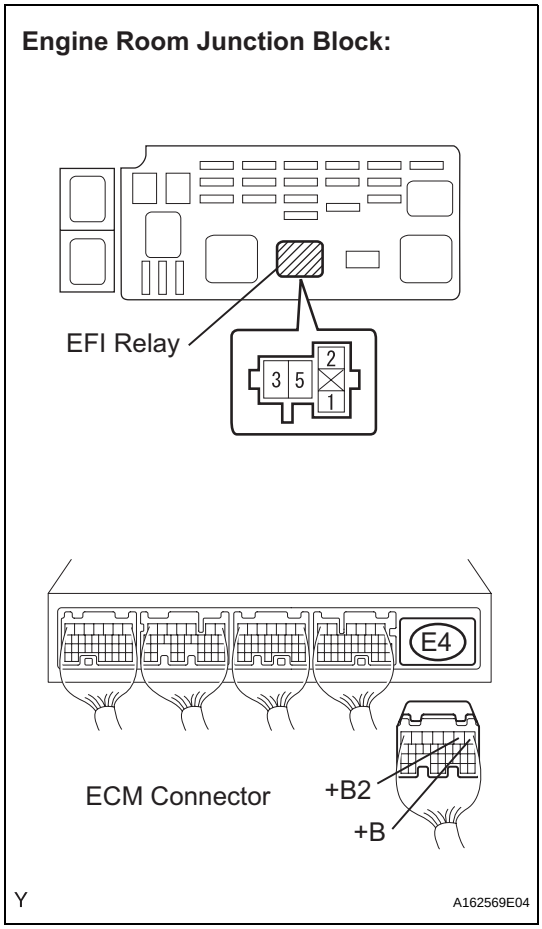

(a) Remove the EFI relay from the engine room junction block.
(b) Disconnect the E4 ECM connector.
(c) Measure the resistance according to the value(s) in the table below.

Standard resistance:

Check for open

Tester Connection	Specified Condition
EFI relay terminal (3) - +B (E4-1)	Below 1 Ω
EFI relay terminal (3) - +B2 (E4-2)	Below 1 Ω

Check for short

Tester Connection	Specified Condition
EFI relay terminal (3) or +B (E4-1) - Body ground	10 kΩ or higher
EFI relay terminal (3) or +B2 (E4-2) - Body ground	10 kΩ or higher

(d) Reinstall the EFI relay.
(e) Reconnect the ECM connector.

NG → **REPAIR OR REPLACE HARNESS OR CONNECTOR (EFI RELAY - ECM)**

OK

13	CHECK HARNESS AND CONNECTOR (EFI RELAY - BODY GROUND)

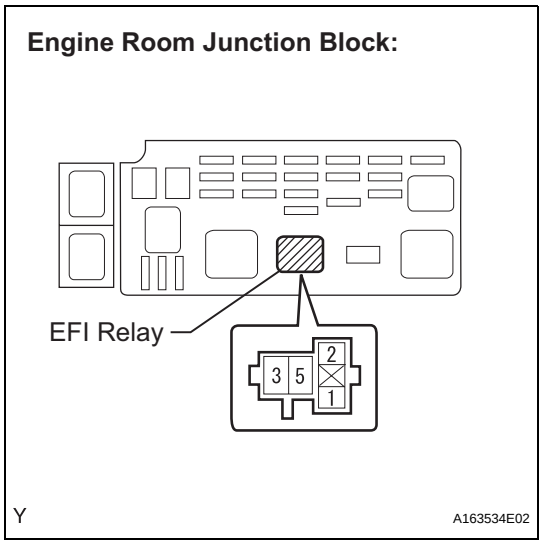

(a) Check the harness and connector between the EFI relay and body ground.
(1) Measure the resistance according to the value(s) in the table below.

Standard resistance :

Check for open

Tester Connection	Specified Condition
EFI relay terminal (1) - Body ground	Below 1 Ω

(2) Reinstall the EFI relay.
(3) Reconnect the ECM connector.

NG → **REPAIR OR REPLACE HARNESS OR CONNECTOR (EFI RELAY - BODY GROUND)**

OK

REPAIR OR REPLACE HARNESS OR CONNECTOR (EFI RELAY - BATTERY)