VC Output Circuit

DESCRIPTION

The ECM constantly uses 5 V from the battery voltages supplied to the +B (BATT) terminal to operate the microprocessor. The ECM also provides this power to the sensors through the VC output circuit.
When the VC circuit is short-circuited, the microprocessor in the ECM and sensors that are supplied power through the VC circuit are inactivated because the power is not supplied from the VC circuit. Under this condition, the system does not start up and the MIL does not illuminate even if the system malfunctions.
HINT:
Under normal conditions, the MIL is illuminated for several seconds when the ignition switch is first turned to the ON position. The MIL goes off when the engine is started.

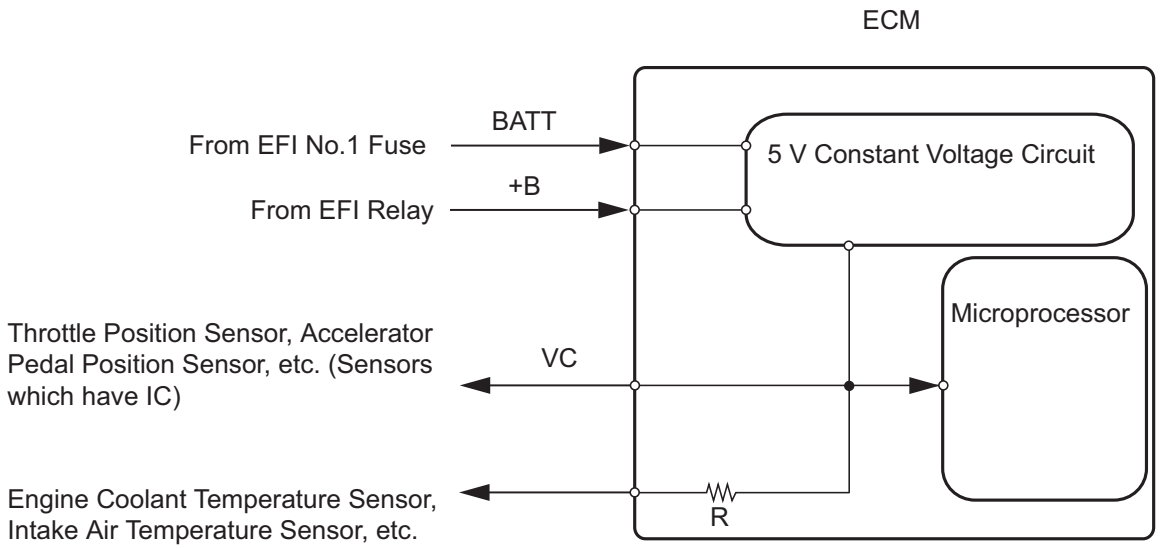

WIRING DIAGRAM

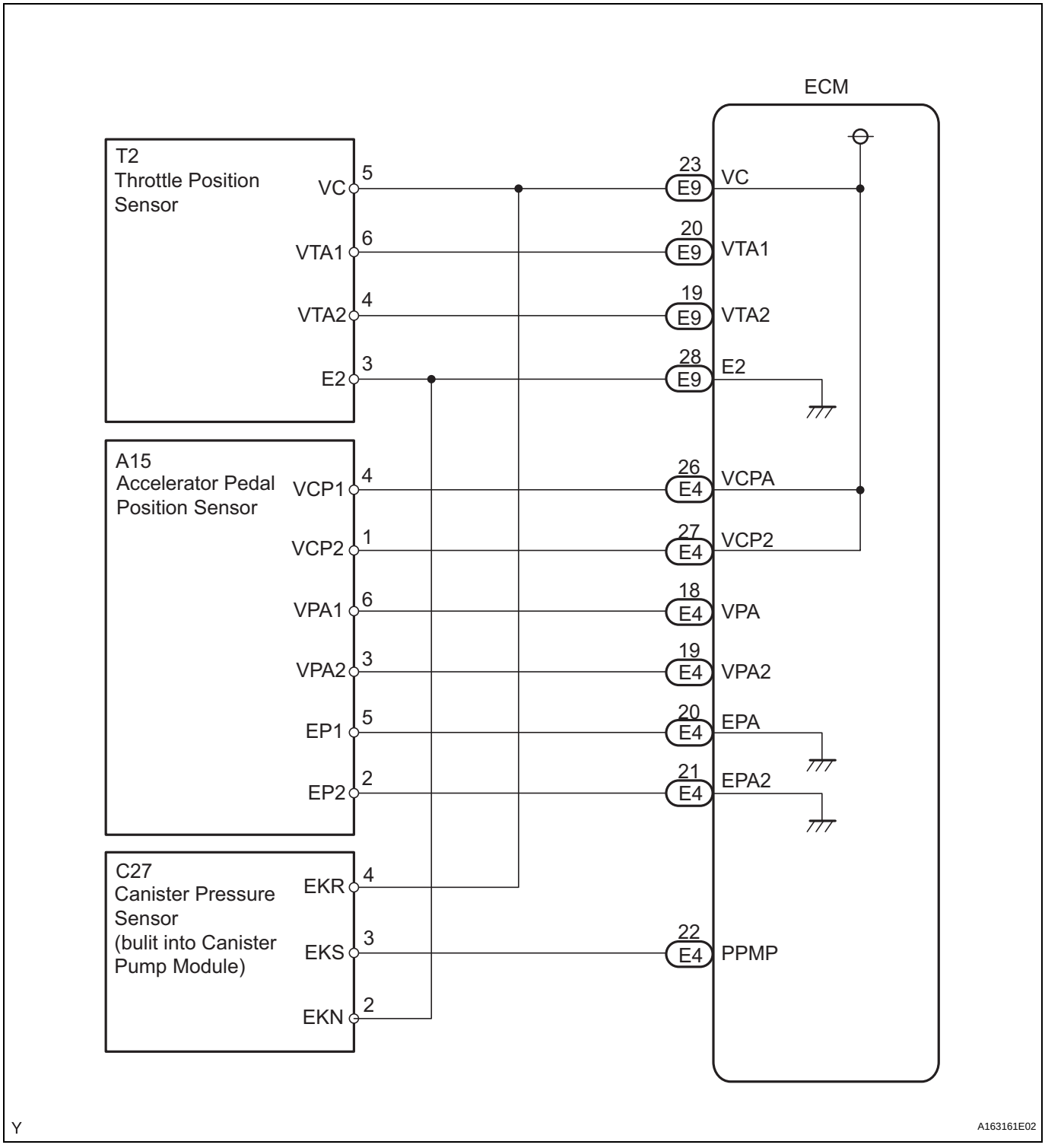

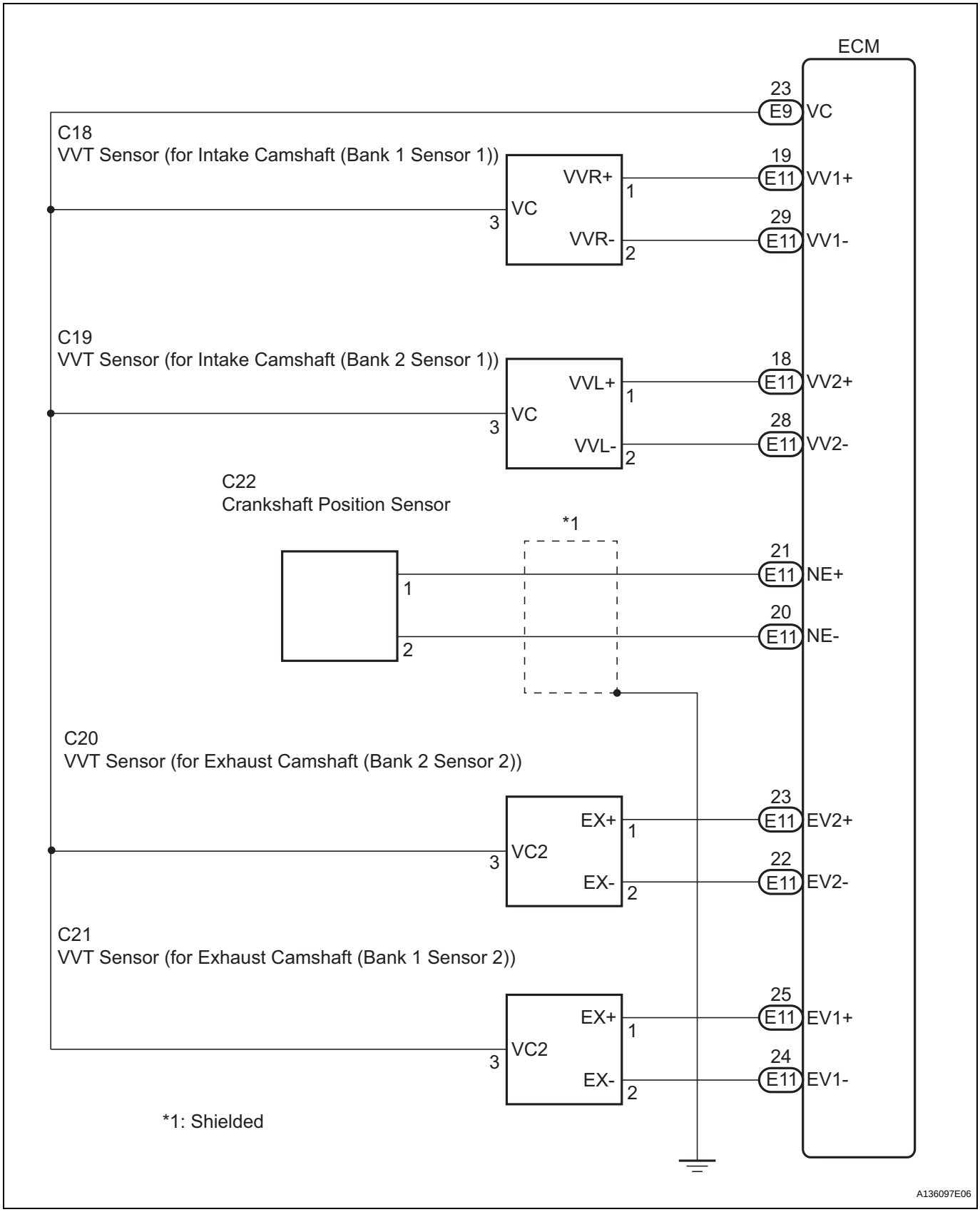
ECM
23
E9
VC
C18
VVT Sensor (for Intake Camshaft (Bank 1 Sensor 1))
VVR+
1
VC
3
VVR-
2
19
E11
VV1+
29
E11
VV1-
C19
VVT Sensor (for Intake Camshaft (Bank 2 Sensor 1))
VVL+
1
VC
3
VVL-
2
18
E11
VV2+
28
E11
VV2-
C22
Crankshaft Position Sensor
*1
1
2
21
E11
NE+
20
E11
NE-
C20
VVT Sensor (for Exhaust Camshaft (Bank 2 Sensor 2))
EX+
1
VC2
3
EX-
2
23
E11
EV2+
22
E11
EV2-
C21
VVT Sensor (for Exhaust Camshaft (Bank 1 Sensor 2))
EX+
1
VC2
3
EX-
2
25
E11
EV1+
24
E11
EV1-
*1: Shielded
A136097E06

INSPECTION PROCEDURE

1	CHECK MIL

(a) Check that the Malfunction Indicator Lamp (MIL) lights up when turning the ignition switch to the ON position.
OK:
MIL lights up.

OK → **GO TO MIL CIRCUIT (See page ES-478)**

NG

2	CHECK CONNECTION BETWEEN INTELLIGENT TESTER AND ECM

(a) Connect the intelligent tester to the DLC3.
(b) Turn the ignition switch to the ON position and turn the tester on.
(c) Check the communication between the tester and ECM.

Result

Result	Proceed to
Communication is possible	A
Communication is not possible	B

A → **GO TO MIL CIRCUIT (See page ES-478)**

B

3	CHECK THROTTLE BODY (CHECK MIL ILLUMINATED)

(a) Disconnect the throttle body connector.
(b) Turn the ignition switch to the ON position.
(c) Check the MIL.

Result

Result	Proceed to
MIL illuminates	A
MIL does not illuminate	B

(d) Reconnect the throttle body connector.

A → **REPLACE THROTTLE BODY (See page ES-493)**

B

4	CHECK ACCELERATOR PEDAL ROD (CHECK MIL ILLUMINATED)

(a) Disconnect the accelerator pedal position sensor connector.
(b) Turn the ignition switch to the ON position.
(c) Check the MIL.

Result

Result	Proceed to
MIL illuminates	A
MIL does not illuminate	B

(d) Reconnect the accelerator pedal position sensor connector.

A → **REPLACE ACCELERATOR PEDAL ROD (See page ES-502)**

B →

ES

5	CHECK VVT SENSOR FOR INTAKE CAMSHAFT BANK 1 (CHECK MIL ILLUMINATED)

(a) Disconnect the VVT sensor for intake camshaft bank 1 connector.
(b) Turn the ignition switch to the ON position.
(c) Check the MIL.

Result

Result	Proceed to
MIL illuminates	A
MIL does not illuminate	B

(d) Reconnect the VVT sensor for intake camshaft bank 1 connector.

A → **REPLACE VVT SENSOR FOR INTAKE CAMSHAFT BANK 1 (See page ES-509)**

B →

6	CHECK VVT SENSOR FOR EXHAUST CAMSHAFT BANK 1 (CHECK MIL ILLUMINATED)

(a) Disconnect the VVT sensor for exhaust camshaft bank 1 connector.
(b) Turn the ignition switch to the ON position.
(c) Check the MIL.

Result

Result	Proceed to
MIL illuminates	A
MIL does not illuminate	B

(d) Reconnect the VVT sensor for exhaust camshaft bank 1 connector.

A → **REPLACE VVT SENSOR FOR EXHAUST CAMSHAFT BANK 1 (See page ES-509)**

B →

7	CHECK VVT SENSOR FOR INTAKE CAMSHAFT BANK 2 (CHECK MIL ILLUMINATED)

(a) Disconnect the VVT sensor for intake camshaft bank 2 connector.
(b) Turn the ignition switch to the ON position.
(c) Check the MIL.

Result

Result	Proceed to
MIL illuminates	A
MIL does not illuminate	B

(d) Reconnect the VVT sensor for intake camshaft bank 2 connector.

A → **REPLACE VVT SENSOR FOR INTAKE CAMSHAFT BANK 2 (See page ES-509)**

B

8	CHECK VVT SENSOR FOR EXHAUST CAMSHAFT BANK 2 (CHECK MIL ILLUMINATED)

(a) Disconnect the VVT sensor for exhaust camshaft bank 2 connector.
(b) Turn the ignition switch to the ON position.
(c) Check the MIL.

Result

Result	Proceed to
MIL illuminates	A
MIL does not illuminate	B

(d) Reconnect the VVT sensor for exhaust camshaft bank 2 connector.

A → **REPLACE VVT SENSOR FOR EXHAUST CAMSHAFT BANK 2 (See page ES-509)**

B

9	CHECK CHARCOAL CANISTER ASSEMBLY (CHECK MIL ILLUMINATED)

(a) Disconnect the canister pump module connector.
(b) Turn the ignition switch to the ON position.
(c) Check the MIL.

Result

Result	Proceed to
MIL illuminates	A
MIL does not illuminate	B

(d) Reconnect the canister pump module connector.

A → **REPLACE CHARCOAL CANISTER ASSEMBLY (See page EC-8)**

B

10	CHECK HARNESS AND CONNECTOR

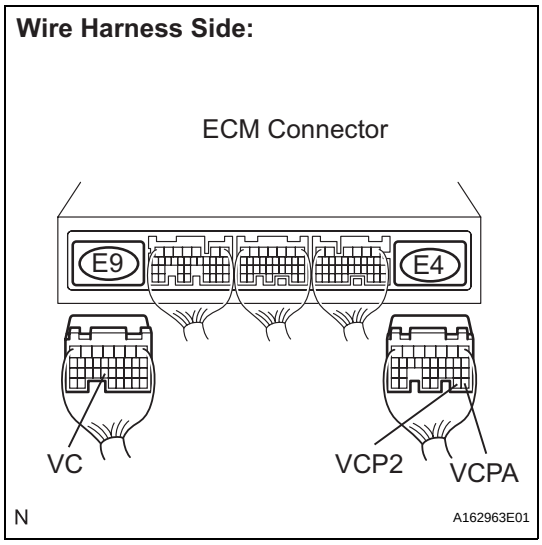

(a) Disconnect the throttle body connector.
(b) Disconnect the accelerator pedal position sensor connector.
(c) Disconnect the VVT sensor for intake camshaft bank 1 connector.
(d) Disconnect the VVT sensor for exhaust camshaft bank 1 connector.
(e) Disconnect the VVT sensor for intake camshaft bank 2 connector.
(f) Disconnect the VVT sensor for exhaust camshaft bank 2 connector.
(g) Disconnect the canister pump module connector.
(h) Disconnect the E9 and E4 ECM connectors.
(i) Measure the resistance according to the value(s) in the table below.

Standard resistance (Check for short)

Tester Connections	Specified Conditions
VC (E9-23) - Body ground	10 kΩ or higher
VCPA (E4-26) - Body ground	10 kΩ or higher
VCP2 (E4-27) - Body ground	10 kΩ or higher

(j) Reconnect the ECM connectors.
(k) Reconnect the canister pump module connector.
(l) Reconnect the VVT sensor for exhaust camshaft bank 2 connector.
(m) Reconnect the VVT sensor for intake camshaft bank 2 connector.
(n) Reconnect the VVT sensor for exhaust camshaft bank 1 connector.
(o) Reconnect the VVT sensor for intake camshaft bank 1 connector.
(p) Reconnect the accelerator pedal position sensor connector.
(q) Reconnect the throttle body connector.

NG → **REPAIR OR REPLACE HARNESS OR CONNECTOR**

OK

REPLACE ECM (See page ES-498)