Fuel Pump Control Circuit

DESCRIPTION

The FUEL PUMP relay switches the fuel pump speed according to the engine conditions. The fuel pump operates when the ECM receives the starter-operating signal (STA) and crankshaft-rotating signal (NE). The FUEL PUMP relay is turned ON while the engine is idling or operating at low load. This causes current to flow through the fuel pump resistor to the fuel pump. The fuel pump then operates at low speed. The FUEL PUMP relay is turned OFF while the engine is cranking or operating at high load. The fuel pump then operates at normal speed.

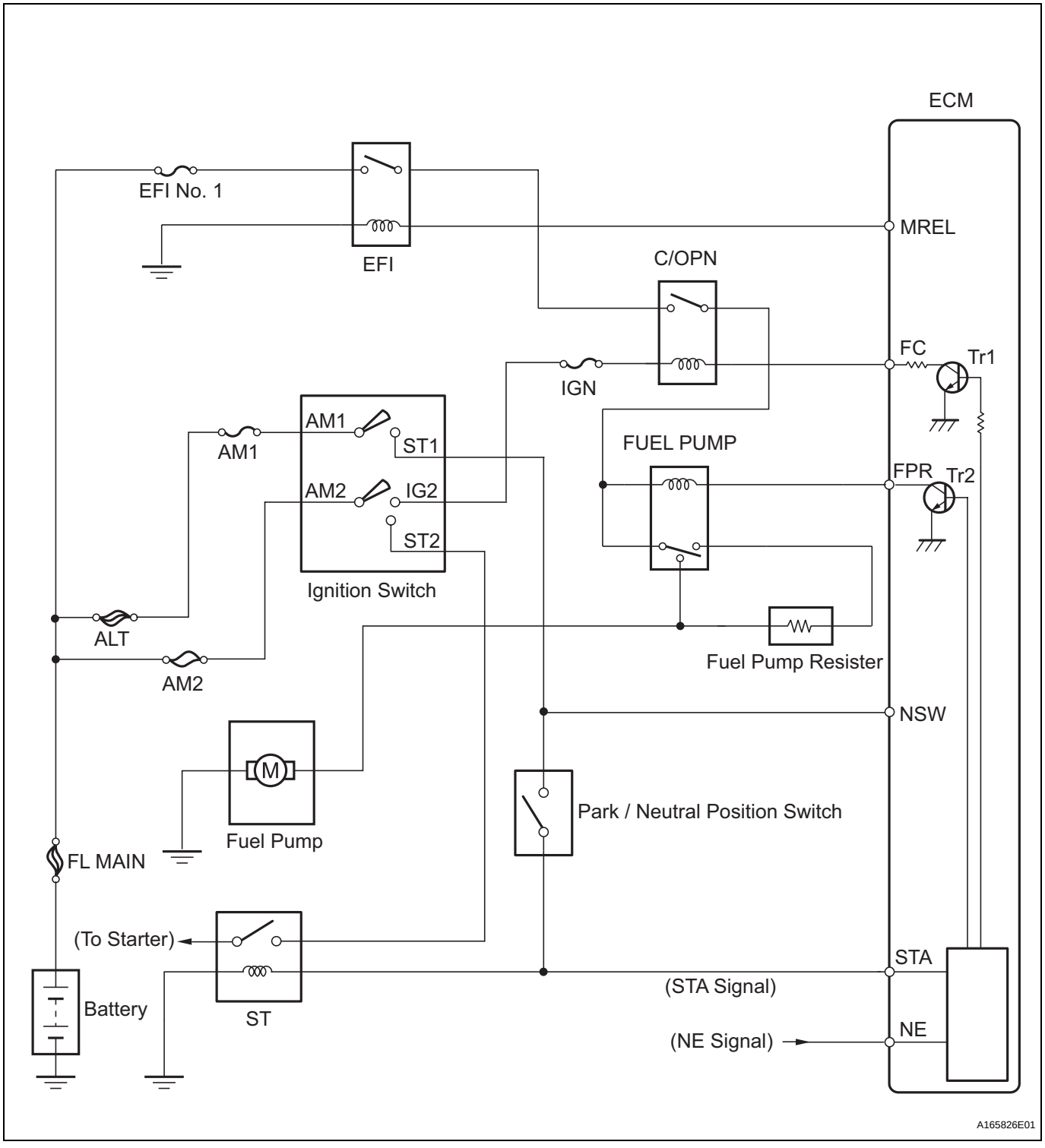

WIRING DIAGRAM

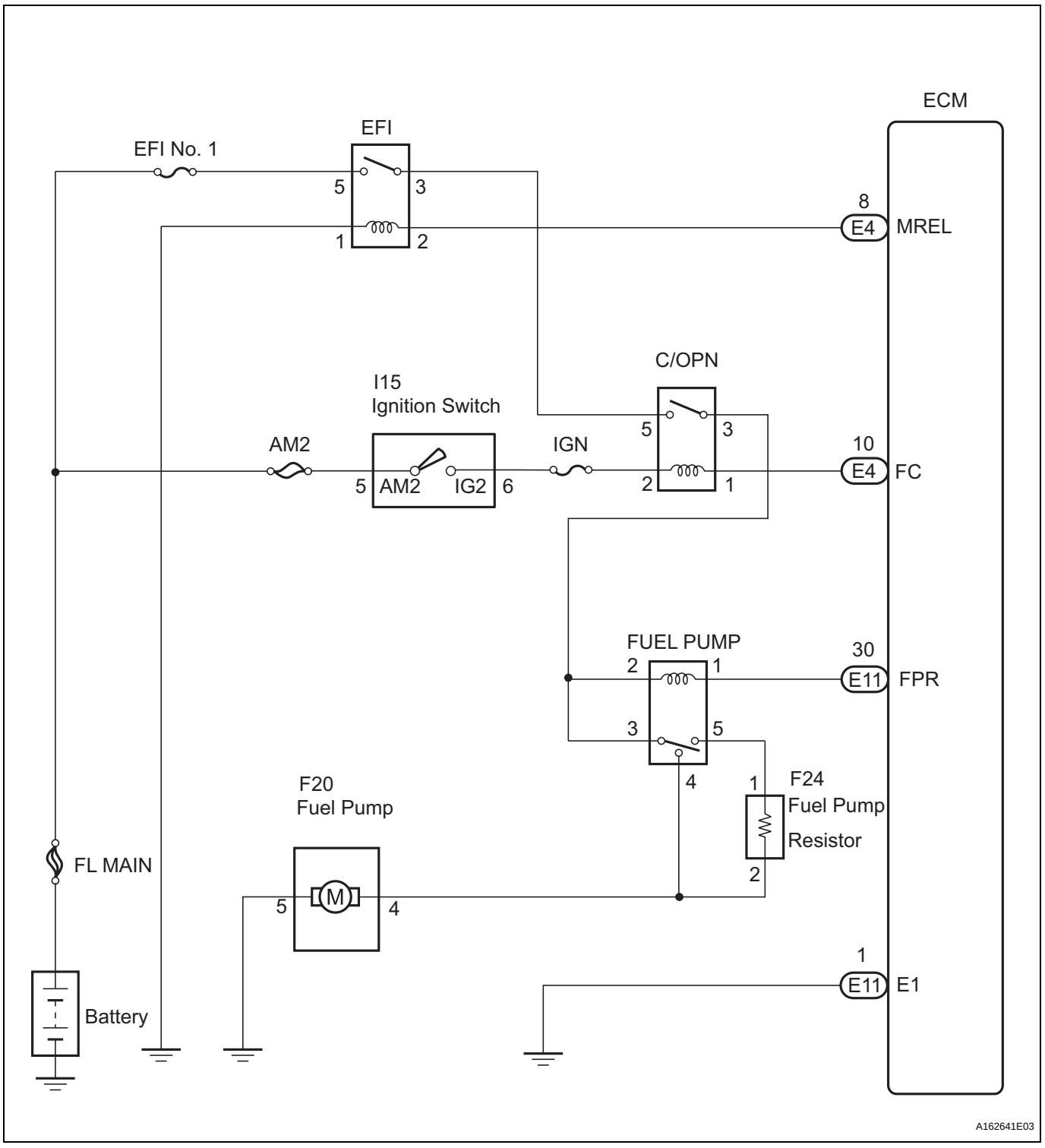

INSPECTION PROCEDURE

1	**CHECK FUEL PUMP**

(a) Check if there is pressure in the fuel inlet hose.
HINT:
If there is fuel pressure, the sound of fuel flowing will be heard.

OK → Go to step 14

NG

2 PERFORM ACTIVE TEST BY INTELLIGENT TESTER (OPERATE C/OPN RELAY)

(a) Connect the intelligent tester to the DLC3.
(b) Turn the ignition switch to the ON position and turn the intelligent tester or the OBD II scan tool main switch on.
(c) Enter the following menus: DIAGNOSIS / ENHANCED OBD II / ACTIVE TEST / FUEL PUMP / SPD.
(d) Check the relay operation while operating it using the intelligent tester.
Standard:
Operating noise can be heard from the relay.

ES

OK → **PROCEED TO NEXT CIRCUIT INSPECTION SHOWN IN PROBLEM SYMPTOMS TABLE (See page ES-27)**

NG

3 INSPECT RELAY (C/OPN RELAY)

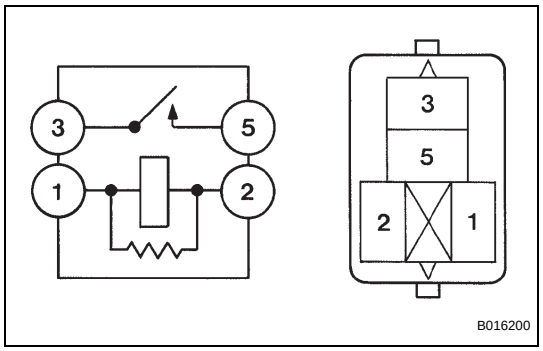

(a) Remove the C/OPN relay from the engine room junction block.
(b) Measure the resistance according to the value(s) in the table below.
Standard resistance

Tester Connection	Specified Condition
3 - 5	10 kΩ or higher
3 - 5	Below 1 Ω (Apply battery voltage between terminals 1 and 2)

(c) Reinstall the C/OPN relay.

NG → **REPLACE RELAY (C/OPN RELAY)**

OK

4 INSPECT ECM (FC VOLTAGE)

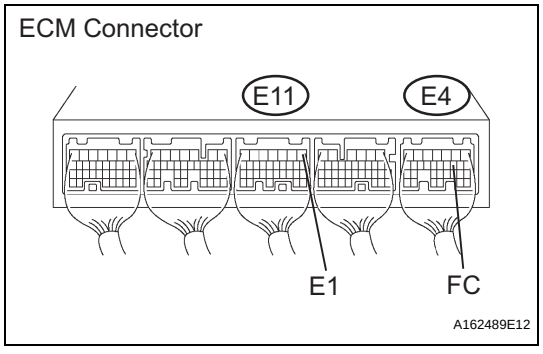

(a) Turn the ignition switch to the ON position.
(b) Measure the voltage according to the value(s) in the table below.
Standard voltage

Tester Connection	Specified Condition
E4-10 (FC) - E11-1 (E1)	9 to 14 V

OK → Go to step 8

NG

5 CHECK HARNESS AND CONNECTOR (ECM - C/OPN RELAY)

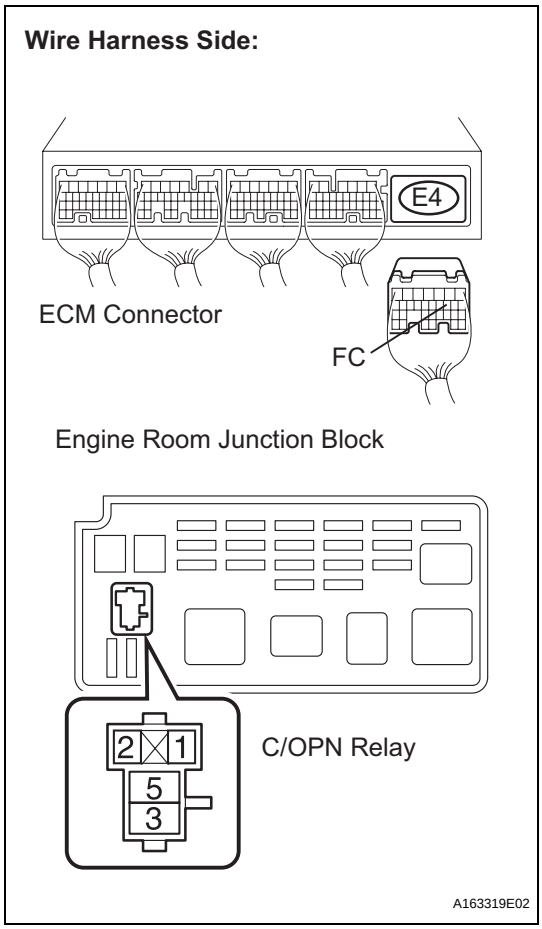

(a) Disconnect the E4 ECM connector.
(b) Remove the C/OPN relay from the engine room junction block.
(c) Measure the resistance according to the value(s) in the table below.

Standard resistance:

Check for open

Tester Connection	Specified Condition
FC (E4-10) - C/OPN terminal (1)	Below 1 Ω

Check for short

Tester Connection	Specified Condition
FC (E4-10) or C/OPN terminal (1) - Body ground	10 kΩ or higher

(d) Reconnect the ECM connector.
(e) Reinstall the C/OPN relay.

NG → **REPAIR OR REPLACE HARNESS OR CONNECTOR (ECM - C/OPN RELAY)**

OK

6 CHECK FUSE (IGN FUSE)

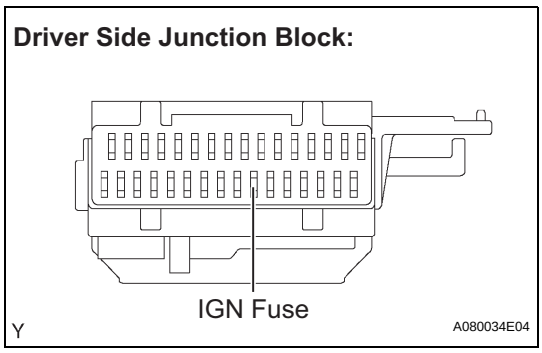

(a) Remove the IGN fuse from the driver side junction block.
(b) Measure the resistance according to the value(s) in the table below.

Standard resistance:

Below 1 Ω

(c) Reinstall the IGN fuse.

NG → **REPLACE FUSE (IGN FUSE)**

OK

7 CHECK HARNESS AND CONNECTOR (C/OPN RELAY - IGNITION SWITCH)

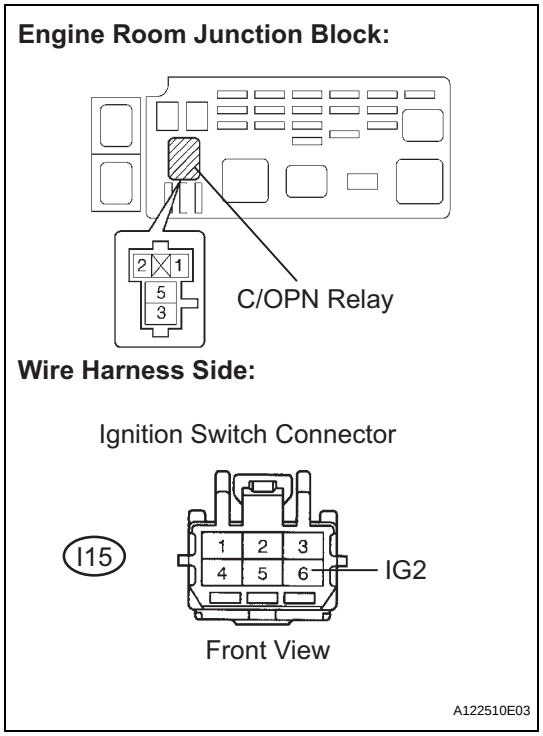

(a) Reconnect the I15 ignition switch connector.
(b) Remove the C/OPN relay from the engine room junction block.
(c) Measure the resistance according to the value(s) in the table below.

Standard resistance:
Check for open

Tester Connection	Specified Condition
IG2 (I15-6) - C/OPN terminal (2)	Below 1 Ω

Standard resistance:
Check for short

Tester Connection	Specified Condition
IG2 (I15-6) or C/OPN terminal (2) - Body ground	10 kΩ or higher

(d) Reconnect the ignition switch connector.
(e) Reinstall the C/OPN relay.

NG → **REPAIR OR REPLACE HARNESS OR CONNECTOR (C/OPN RELAY - IGNITION SWITCH)**

OK

8 CHECK ECM POWER SOURCE CIRCUIT

NG → **REPAIR OR REPLACE ECM POWER SOURCE CIRCUIT**

OK

9 INSPECT RELAY (FUEL PUMP RELAY)

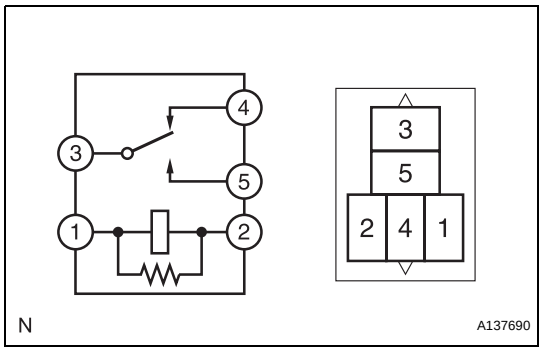

(a) Remove the fuel pump relay from the engine room junction block.
(b) Measure the resistance according to the value(s) in the table below.

Standard resistance

Tester connection	Specified Condition
3 - 4	Below 1 Ω
3 - 5	10 kΩ or higher
3 - 4	10 kΩ or higher (When battery voltage is applied to terminals 1 and 2)
3 - 5	Below 1 Ω (When battery voltage is applied to terminals 1 and 2)

(c) Reinstall the fuel pump relay.

NG → REPLACE RELAY (FUEL PUMP RELAY)

OK

10	INSPECT FUEL PUMP

Component Side:

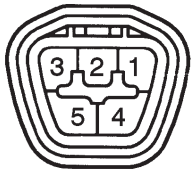

Fuel Pump

A074356E31

(a) Measure the resistance of the fuel pump.
(1) Measure the resistance according to the value(s) in the table below.

Standard resistance

Tester Connection	Condition	Specified Condition
4 - 5	20°C (68°F)	0.2 to 0.3 Ω

(b) Check operation of the fuel pump.
(1) Apply battery voltage to both terminals. Check that the pump operates.

NOTICE:
- **These tests must be done quickly (within 10 seconds) to prevent the coil from burning out.**
- **Keep the fuel pump as far away from the battery as possible.**
- **Always turn ON and OFF the voltage on the battery side, not on the fuel pump side.**

NG → REPLACE FUEL PUMP ASSEMBLY (See page FU-30)

OK

11 CHECK HARNESS AND CONNECTOR (FUEL PUMP - FUEL PUMP RELAY)

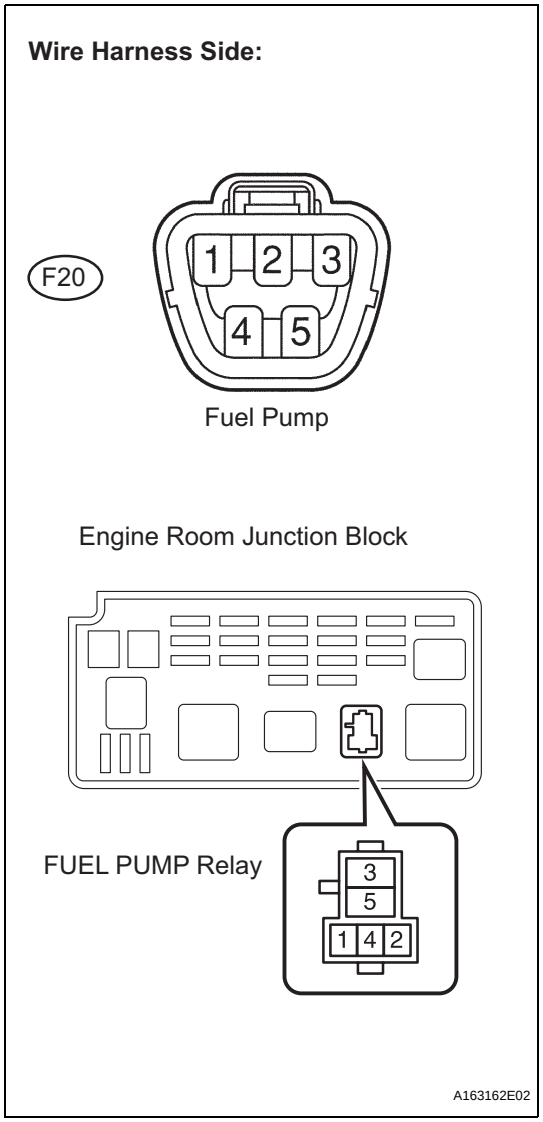

(a) Check the wire harness between the FUEL PUMP relay and fuel pump.
  (1) Remove the FUEL PUMP relay from the engine room junction block.
  (2) Disconnect the F20 fuel pump connector.
  (3) Measure the resistance according to the value(s) in the table below.
  Standard resistance

Tester Connection	Specified Condition
FUEL PUMP relay terminal 4 - F20-4	Below 1 Ω
FUEL PUMP relay terminal 4 or F20-4 - Body ground	10 kΩ or higher

ES

NG → **REPAIR OR REPLACE HARNESS OR CONNECTOR (FUEL PUMP - FUEL PUMP RELAY)**

OK

12 CHECK HARNESS AND CONNECTOR (FUEL PUMP - BODY GROUND)

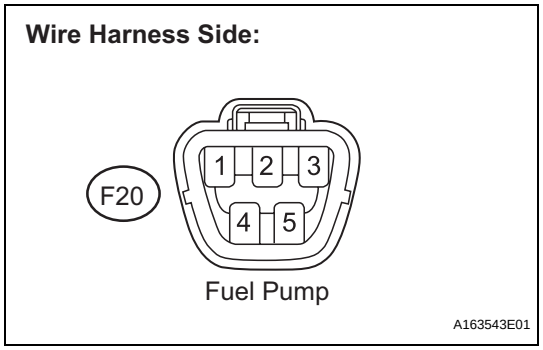

(a) Check the wire harness between the fuel pump and body ground.
  (1) Disconnect the F20 fuel pump connector.
  (2) Measure the resistance between the terminal of the wire harness side connector and body ground.
  Standard resistance

Tester Connection	Specified Condition
F20-5 (Fuel pump) - Body ground	Below 1 Ω

(b) Reinstall the FUEL PUMP relay.
(c) Reconnect the fuel pump connector.

NG → REPAIR OR REPLACE HARNESS OR CONNECTOR (FUEL PUMP - BODY GROUND)

OK

13 CHECK HARNESS AND CONNECTOR (C/OPN RELAY - FUEL PUMP RELAY)

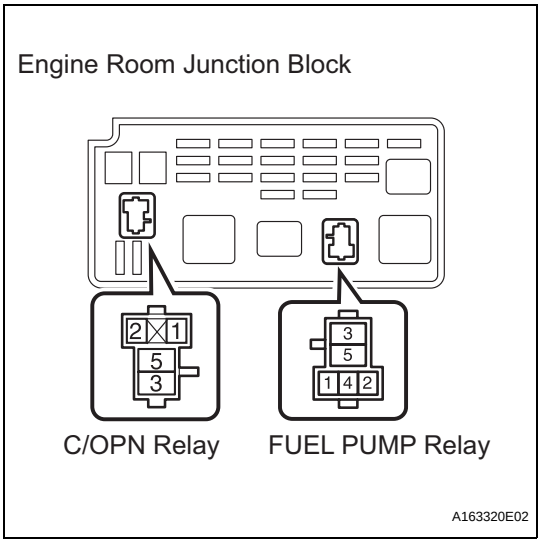

(a) Remove the C/OPN relay from the engine room junction block.
(b) Remove the FUEL PUMP relay from the engine room junction block.
(c) Measure the resistance according to the value(s) in the table below.

Standard resistance:

Check for open

Tester Connection	Specified Condition
C/OPN relay terminal (3) - FUEL PUMP relay terminal (3)	Below 1 Ω
C/OPN relay terminal (3) - FUEL PUMP relay terminal (2)	Below 1 Ω

Check for short

Tester Connection	Specified Condition
C/OPN relay terminal (3) or FUEL PUMP relay terminal (3) - Body ground	10 kΩ or higher
C/OPN relay terminal (3) or FUEL PUMP relay terminal (2) - Body ground	10 kΩ or higher

(d) Reinstall the C/OPN relay.
(e) Reinstall the FUEL PUMP relay.

NG → REPAIR OR REPLACE HARNESS OR CONNECTOR (C/OPN RELAY - FUEL PUMP RELAY)

OK

14 INSPECT FUEL PUMP RESISTOR

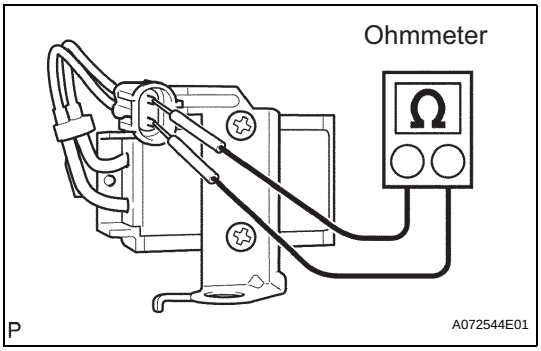

(a) Disconnect the F24 fuel pump resistor connector.
(b) Measure the resistance according to the value(s) in the table below.

Standard resistance

Tester Connection	Condition	Specified Condition
1 - 2	20°C (68°F)	0.30 to 0.34 Ω

(c) Reconnect the fuel pump resistor connector.

NG → REPLACE FUEL PUMP RESISTOR

OK

15	CHECK HARNESS AND CONNECTOR (FUEL PUMP RELAY - FUEL PUMP RESISTOR)

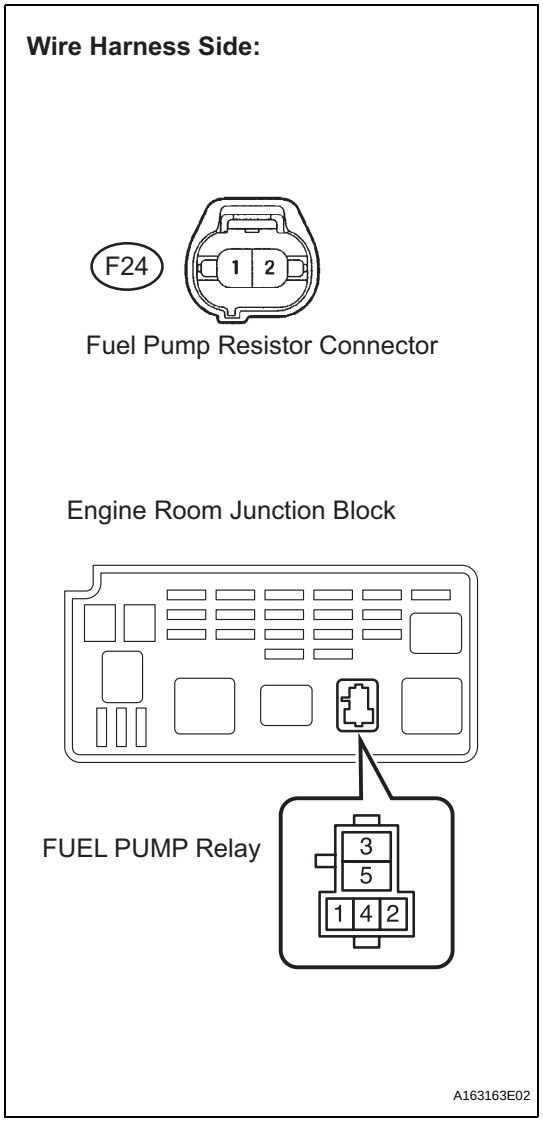

(a) Disconnect the F24 fuel pump resistor connector.
(b) Remove the FUEL PUMP relay from the engine room junction block.
(c) Measure the resistance according to the value(s) in the table below.

Standard resistance:

Check for open

Tester Connection	Specified Condition
FUEL PUMP relay terminal (4) - F24-2	Below 1 Ω
FUEL PUMP relay terminal (5) - F24-1	Below 1 Ω

Check for short

Tester Connection	Specified Condition
FUEL PUMP relay terminal (4) or F24-2 - Body ground	10 kΩ or higher
FUEL PUMP relay terminal (5) or F24-1 - Body ground	10 kΩ or higher

(d) Reconnect the fuel pump resistor connector.
(e) Reinstall the FUEL PUMP relay.

NG → **REPAIR OR REPLACE HARNESS OR CONNECTOR (FUEL PUMP RELAY - FUEL PUMP RESISTOR)**

OK

ES

16	CHECK HARNESS AND CONNECTOR (FUEL PUMP RESISTOR - FUEL PUMP)

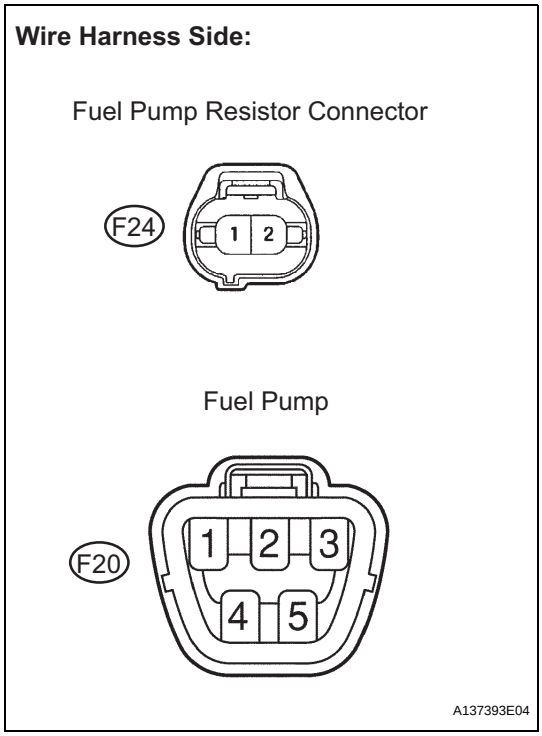

(a) Disconnect the F24 fuel pump resistor connector.
(b) Disconnect the F20 fuel pump connector.
(c) Measure the resistance according to the value(s) in the table below.

Standard resistance:

Check for open

Tester Connection	Specified Condition
F24-2 - F20-4	Below 1 Ω

Check for short

Tester Connection	Specified Condition
F24-2 or F20-4 - Body ground	10 kΩ or higher

(d) Reconnect the fuel pump resistor connector.
(e) Reconnect the fuel pump connector.

NG → **REPAIR OR REPLACE HARNESS OR CONNECTOR (FUEL PUMP RESISTOR - FUEL PUMP)**

OK

PROCEED TO NEXT CIRCUIT INSPECTION SHOWN IN PROBLEM SYMPTOMS TABLE (See page ES-27)