Cranking Holding Function Circuit

DESCRIPTION

The system detects the ignition switch's starting signal (STSW) and then supplies current to the starter until the ECM judges that the engine has started successfully. The purpose is to reduce the holding time of the ignition key.

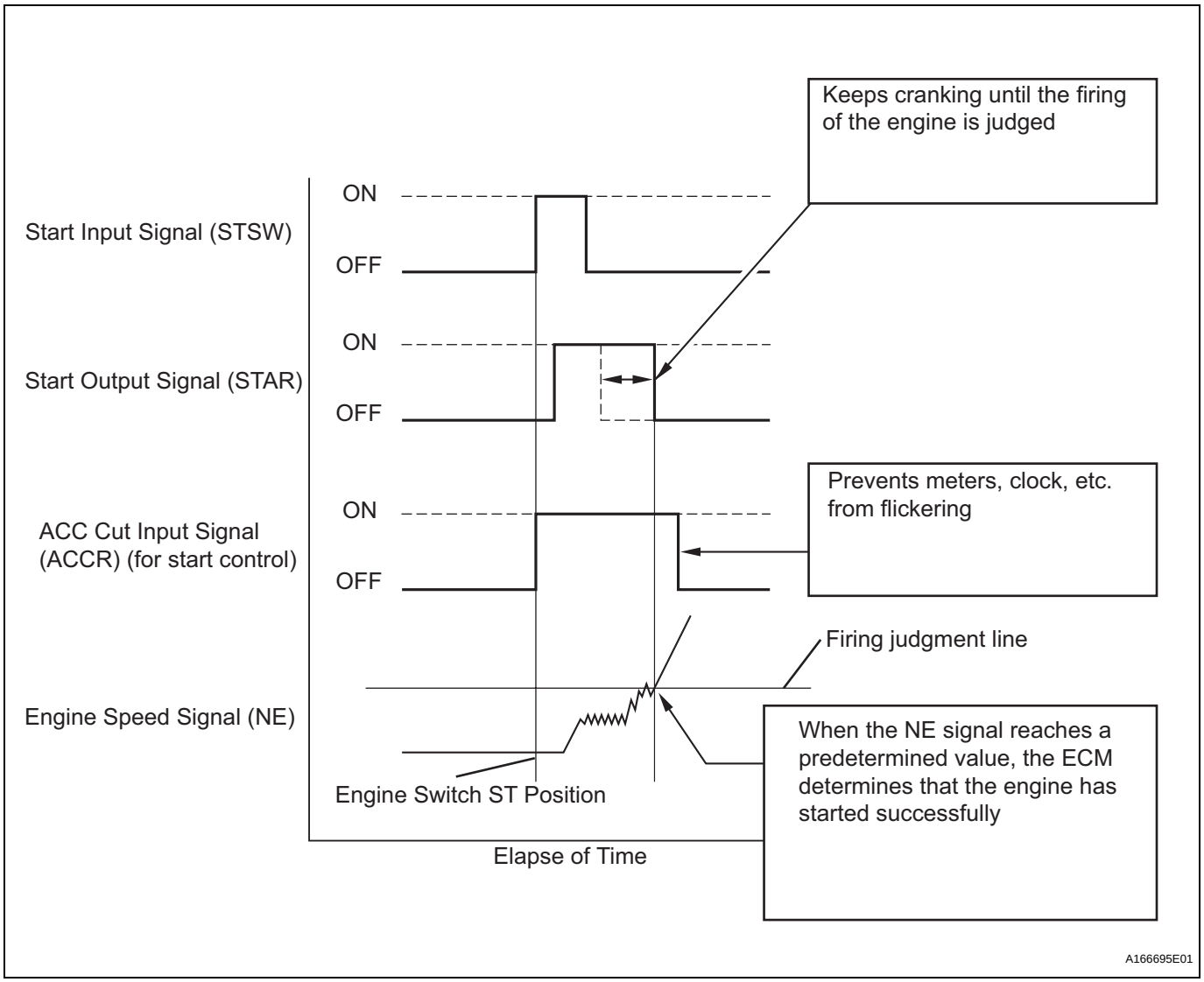

WIRING DIAGRAM

Refer to DTC P0617 (See page ES-320).

INSPECTION PROCEDURE

1	CHECK CRANKING

(a) When starting the engine, check whether the starter motor starts.

OK:

Engine is cranking.

OK → CHECK FOR INTERMITTENT PROBLEMS

NG

2 READ VALUE OF INTELLIGENT TESTER (STA SIGNAL)

(a) Connect the intelligent tester to the DLC3.
(b) Turn the ignition switch to the ON position.
(c) Turn the tester on.
(d) Select the following menu items: DIAGNOSIS / ENHANCED OBDII / DATA LIST / ALL / STARTER SIG.
(e) Check the result when the ignition switch is turned ON and when the engine is started.

ES

OK

Display (STARTER SIG)	Condition
OFF	Ignition switch ON
ON	Engine start

OK → Go to step 6

NG

3 CHECK ECM (STAR AND STSW VOLTAGE)

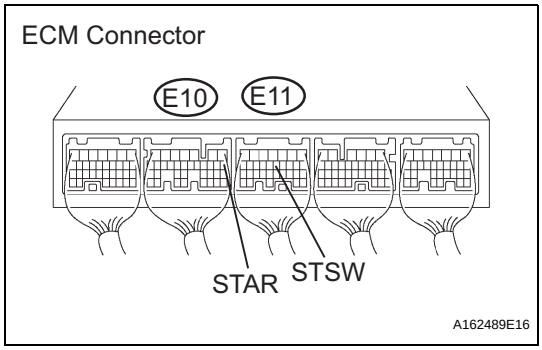

(a) Measure the voltage between the terminals of the ECM connector and body ground while cranking the engine.
Standard voltage

Tester Connection	Specified Condition
STAR (E10-8) - Body ground	9 to 14 V
STSW (E11-12) - Body ground	9 to 14 V

Result

Terminal STAR	Terminal STSW	Proceed to
9 to 14 V	9 to 14 V	A
0 V	9 to 14 V	B
0 V	0 V	C

B → REPLACE ECM

C → Go to step 13

A

4 INSPECT PARK/NEUTRAL POSITION SWITCH ASSEMBLY

Component Side:

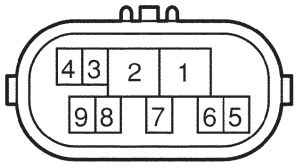

PNP Switch

P A093221E20

(a) Inspect the Park/Neutral Position (PNP) switch.
(1) Disconnect the P1 PNP switch connector.
(2) Measure the resistance according to the value(s) in the table below.

Standard resistance

Shift Position	Tester Connection	Specified Condition
P	2 - 6, 4 - 5	Below 1 Ω
R	1 - 2	Below 1 Ω
N	2 - 9, 4 - 5	Below 1 Ω
D	2 - 7	Below 1 Ω
2	2 - 3	Below 1 Ω
L	2 - 8	Below 1 Ω

(3) Reconnect the PNP switch connector.

NG → **REPLACE PARK/NEUTRAL POSITION SWITCH ASSEMBLY**

OK

5 CHECK HARNESS AND CONNECTOR (IGNITION SWITCH - PARK/NEUTRAL POSITION SWITCH)

Wire Harness Side:

Ignition Switch Connector

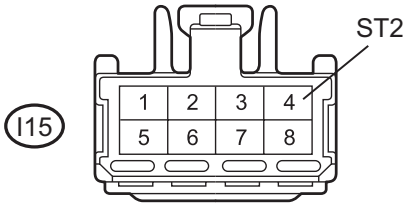

Park/Neutral Position Switch Connector

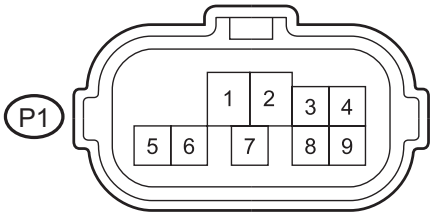

A166711E01

(a) Disconnect the I15 ignition switch connector.
(b) Disconnect the P1 park/neutral position switch connector.
(c) Measure the resistance according to the value(s) in the table below.

Standard resistance (check for open)

Tester Connection	Specified Condition
ST2 (I15-4) - P1-4	Below 1 Ω

Standard resistance (check for short)

Tester Connection	Specified Condition
ST2 (I15-4) or P1-4 - Body ground	10 kΩ or higher

(d) Reconnect the ignition switch connector.
(e) Reconnect the park/neutral position switch connector.

NG → **REPAIR OR REPLACE HARNESS OR CONNECTOR (IGNITION SWITCH - PARK/NEUTRAL POSITION SWITCH)**

ES

OK

REPAIR OR REPLACE HARNESS OR CONNECTOR (PARK/NEUTRAL POSITION SWITCH - ECM)

6 INSPECT ST RELAY

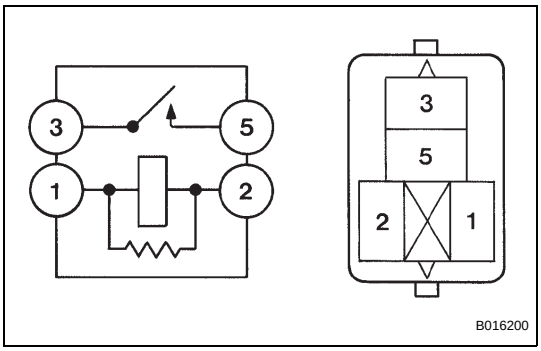

(a) Remove the ST relay from the No. 3 relay block.
(b) Measure the resistance according to the value(s) in the table below.

Standard resistance

Tester Connection	Specified Condition
3 - 5	10 kΩ or higher
3 - 5	Below 1 Ω (Apply battery voltage between terminals 1 and 2)

(c) Reinstall the ST relay to the No. 3 relay block.

NG → **REPLACE ST RELAY**

OK

7 CHECK HARNESS AND CONNECTOR (PARK/NEUTRAL POSITION SWITCH - ST RELAY)

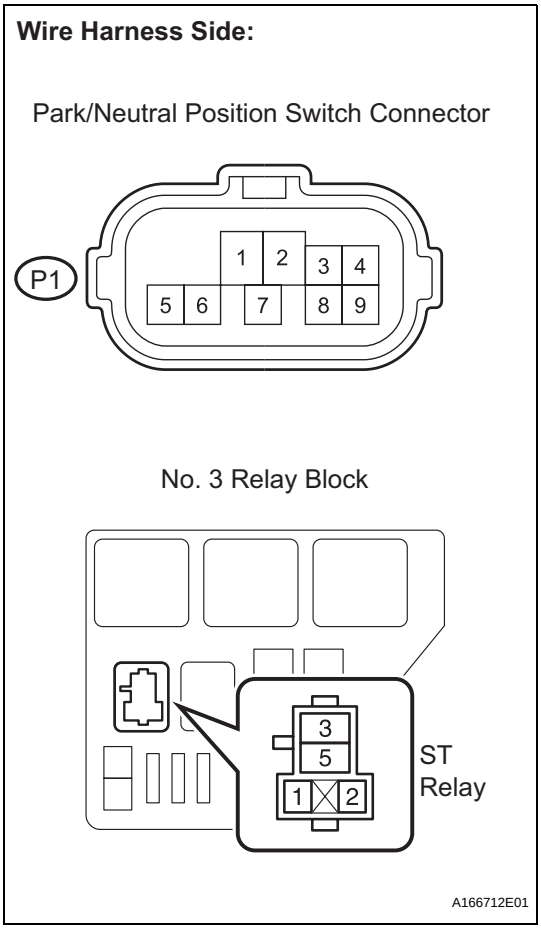

(a) Disconnect the P1 park/neutral position switch connector.
(b) Remove the ST relay from the No. 3 relay block.
(c) Measure the resistance according to the value(s) in the table below.

Standard resistance (check for open)

Tester Connection	Specified Condition
P1-5 - ST relay terminal (1)	Below 1 Ω

Standard resistance (check for short)

Tester Connection	Specified Condition
P1-5 or ST relay terminal (1) - Body ground	10 kΩ or higher

(d) Reconnect the park/neutral position switch connector.
(e) Reinstall the ST relay to the No. 3 relay block.

NG → **REPAIR OR REPLACE HARNESS OR CONNECTOR (PARK/NEUTRAL POSITION SWITCH - ST RELAY)**

OK

8 CHECK HARNESS AND CONNECTOR (ST RELAY - BODY GROUND)

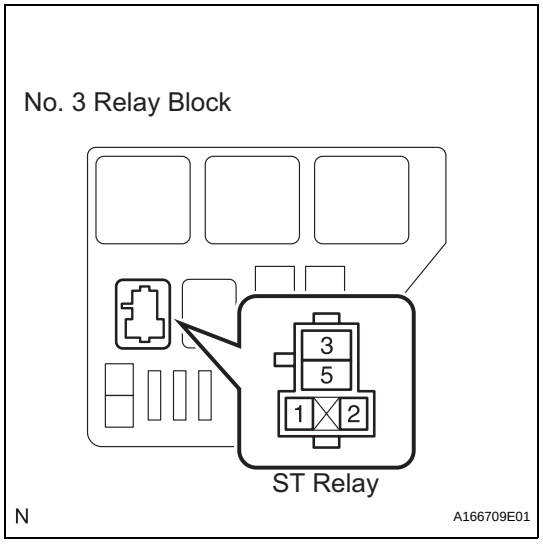

(a) Remove the ST relay from the No. 3 relay block.
(b) Measure the resistance according to the value(s) in the table below.
Standard resistance

Tester Connection	Specified Condition
ST relay terminal (2) - Body ground	Below 1 Ω

(c) Reinstall the ST relay to the No. 3 relay block.

NG → **REPAIR OR REPLACE HARNESS OR CONNECTOR (ST RELAY - BODY GROUND)**

OK

9 CHECK ST RELAY (POWER SOURCE)

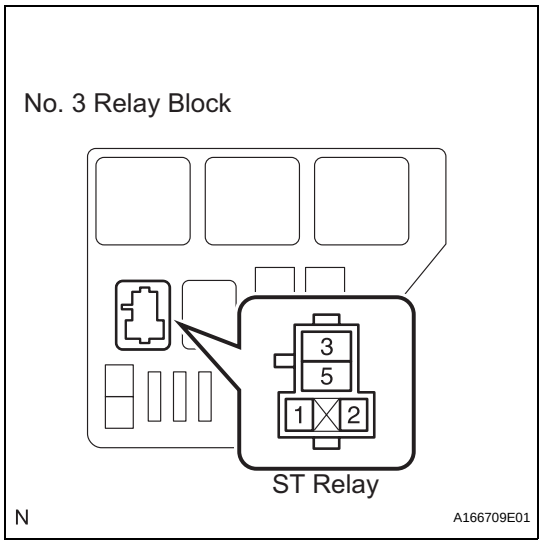

(a) Remove the ST relay from the No. 3 relay block.
(b) Measure the voltage according to the value(s) in the table below.
Standard voltage

Tester Connection	Specified Condition
ST relay terminal (5) - Body ground	9 to 14 V

(c) Reinstall the ST relay to the No. 3 relay block.

OK → **Go to step 11**

NG

ES

10	INSPECT FUSIBLE LINK

Engine Room Junction Block:

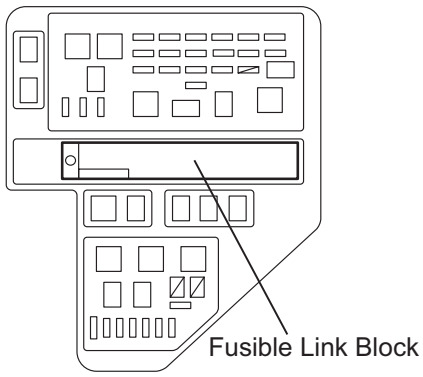

N A166720E02

(a) Remove the fusible link block from the engine room junction block.

(b) Measure the resistance according to the value(s) in the table below.

Standard resistance

Tester Connection	Specified Condition
Fusible link	Below 1 Ω

(c) Reinstall the fusible link block to the engine room junction block.

NG → **REPLACE FUSIBLE LINK**

OK

REPAIR OR REPLACE HARNESS OR CONNECTOR (BATTERY - STARTER RELAY)

11	INSPECT STARTER ASSEMBLY

(a) Inspect the starter assembly (See page ST-7).

NG → **REPLACE STARTER ASSEMBLY**

OK

12	CHECK HARNESS AND CONNECTOR (ST RELAY - STARTER ASSEMBLY)

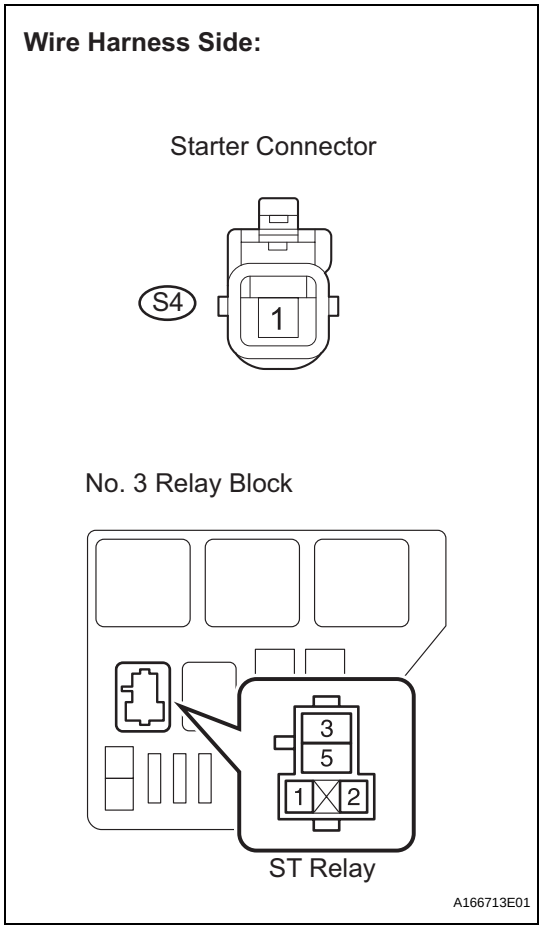

(a) Remove the ST relay from the No. 3 relay block.
(b) Disconnect the S4 starter connector.
(c) Measure the resistance according to the value(s) in the table below.

Standard resistance (check for open)

Tester Connection	Specified Condition
ST relay terminal (3) - S4-1	Below 1 Ω

Standard resistance (check for short)

Tester Connection	Specified Condition
ST relay terminal (3) or S4-1 - Body ground	10 kΩ or higher

(d) Reconnect the starter connector.
(e) Reinstall the ST relay to the No. 3 relay block.

NG → **REPAIR OR REPLACE HARNESS OR CONNECTOR (ST RELAY - STARTER ASSEMBLY)**

OK

REPAIR OR REPLACE HARNESS OR CONNECTOR (BATTERY - STARTER ASSEMBLY)

ES

13	INSPECT FUSE (ST FUSE)

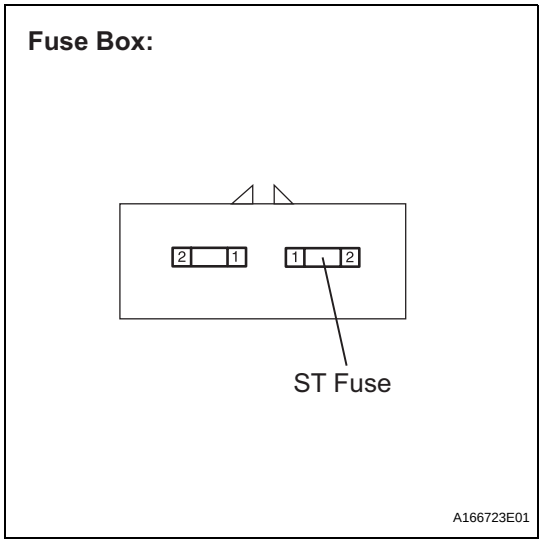

(a) Remove the ST fuse from the fuse box.
(b) Measure the resistance according to the value(s) in the table below.

Standard resistance

Tester Connection	Specified Condition
1 - 2	Below 1 Ω

(c) Reinstall the ST fuse.

NG → **REPLACE FUSE (ST FUSE)**

OK

14	INSPECT IGNITION SWITCH ASSEMBLY

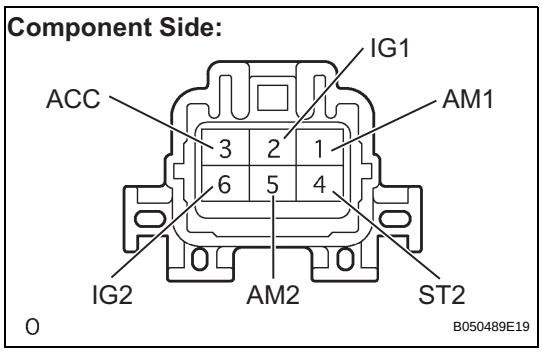

(a) Disconnect the I15 ignition switch connector.
(b) Measure the resistance according to the value(s) in the table below.

Standard resistance

Switch Condition	Tester Connection	Specified Condition
LOCK	All terminals	10 kΩ or higher
ACC	1 - 3	Below 1 Ω
ON	1 - 2, 1 - 3, 2 - 3, 5 - 6	Below 1 Ω
START	4 - 5, 4 - 6, 5 - 6, 1 - 2	Below 1 Ω

(c) Reconnect the ignition switch connector.

NG → **REPLACE IGNITION SWITCH ASSEMBLY**

OK

15	CHECK HARNESS AND CONNECTOR (ECM - IGNITION SWITCH ASSEMBLY)

Wire Harness Side:

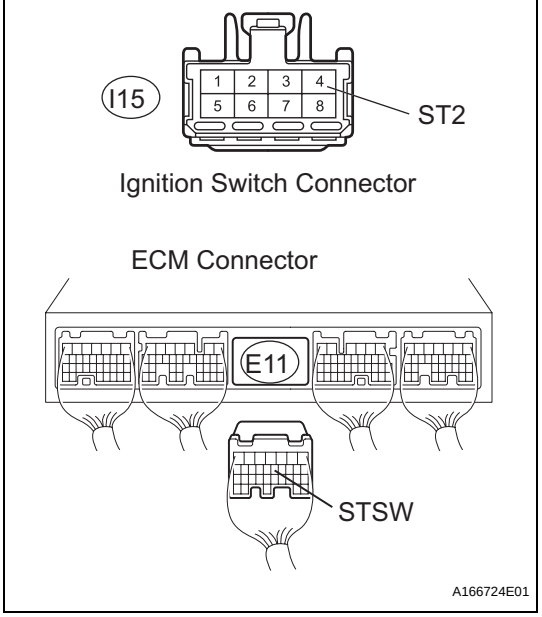

(a) Disconnect the E11 ECM connector.
(b) Disconnect the I15 ignition switch connector.
(c) Measure the resistance according to the value(s) in the table below.

Standard resistance (check for open)

Tester Connection	Specified Condition
STSW (E11-12) - ST2 (I15-4)	Below 1 Ω

Standard resistance (check for short)

Tester Connection	Specified Condition
STSW (E11-12) or ST2 (I15-4) - Body ground	10 kΩ or higher

(d) Reconnect the ECM connector.
(e) Reconnect the ignition switch connector.

NG → **REPAIR OR REPLACE HARNESS OR CONNECTOR (ECM - IGNITION SWITCH ASSEMBLY)**

OK

REPAIR OR REPLACE HARNESS OR CONNECTOR (IGNITION SWITCH - BATTERY)

ES