Active Control Engine Mount System

DESCRIPTION

LOCATION

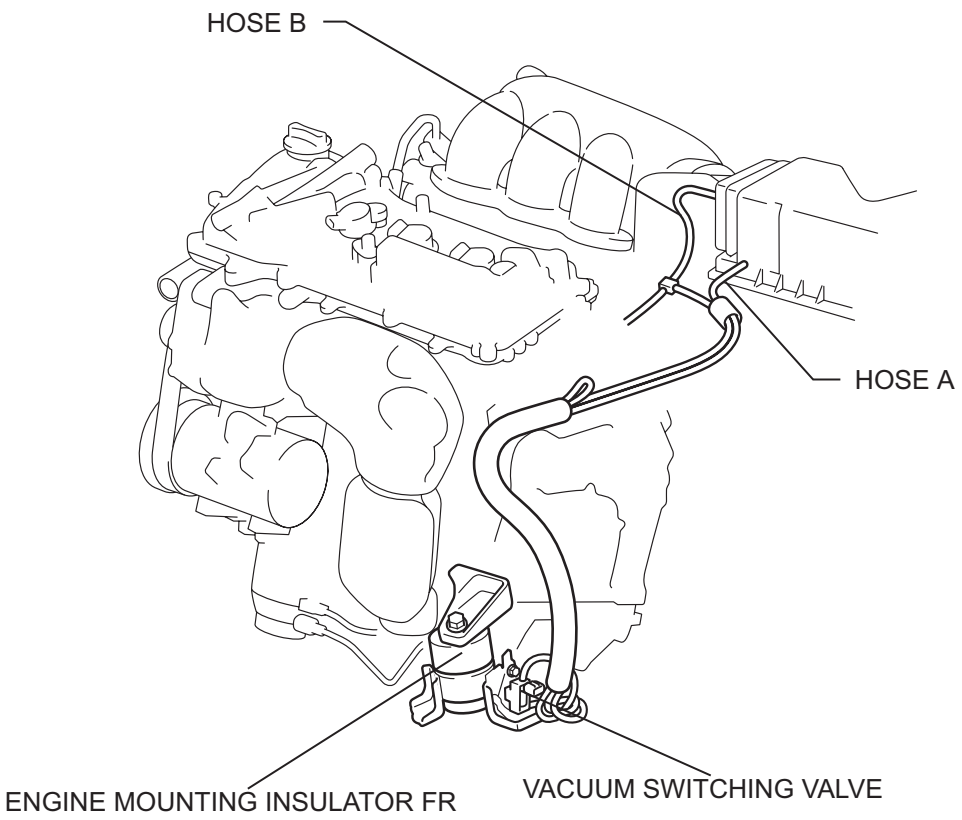

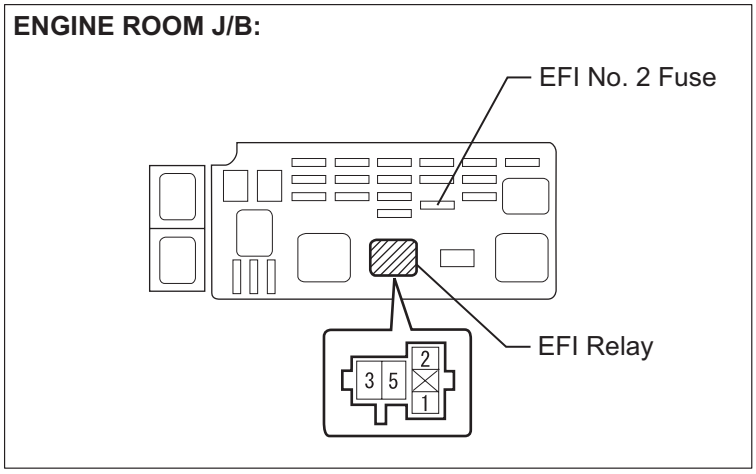

N

A162498E01

The Active Control Engine Mount (ACM) system decreases engine vibration at engine idling using the ACM VSV. The VSV is controlled by a pulse signal transmitted to the VSV from the ECM. The frequency of this pulse signal is matched to the engine speed to decrease engine vibration.

WIRING DIAGRAM

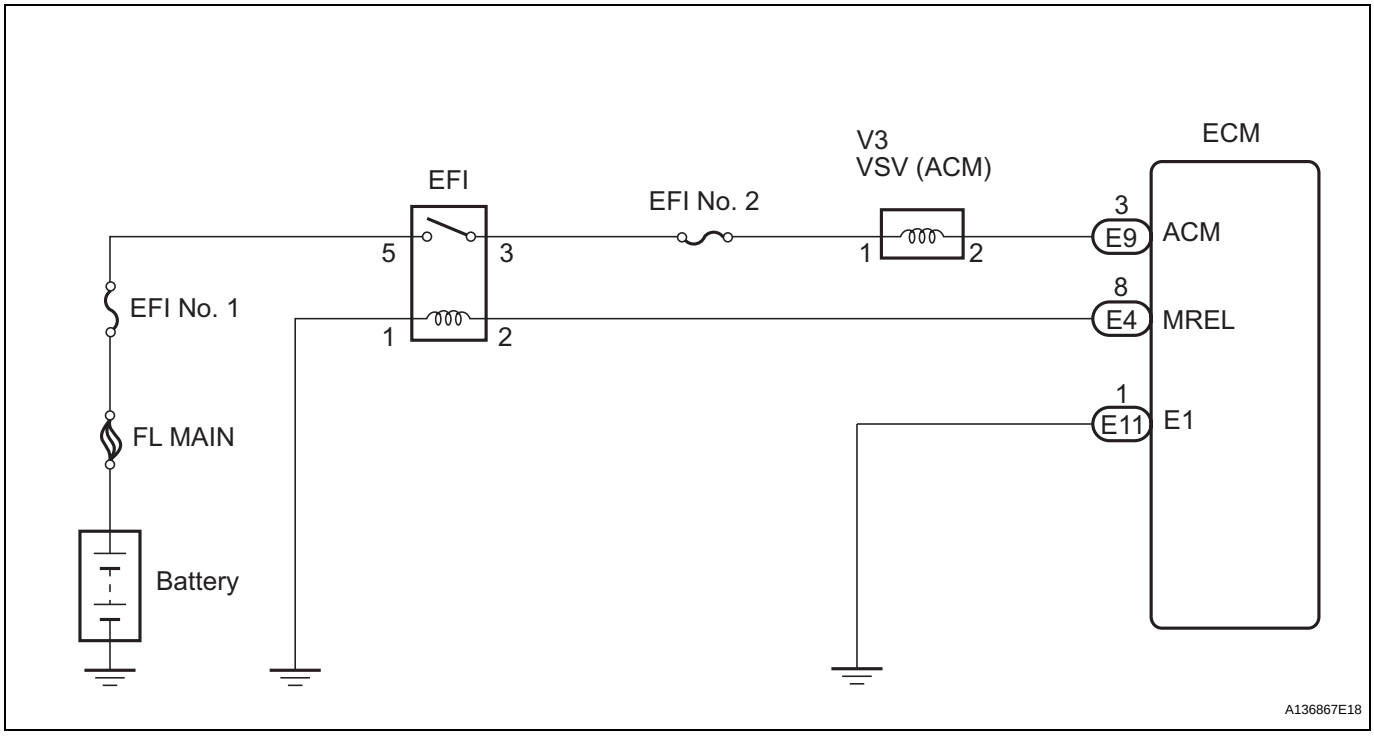

ES

INSPECTION PROCEDURE

1	CHECK VACUUM HOSES

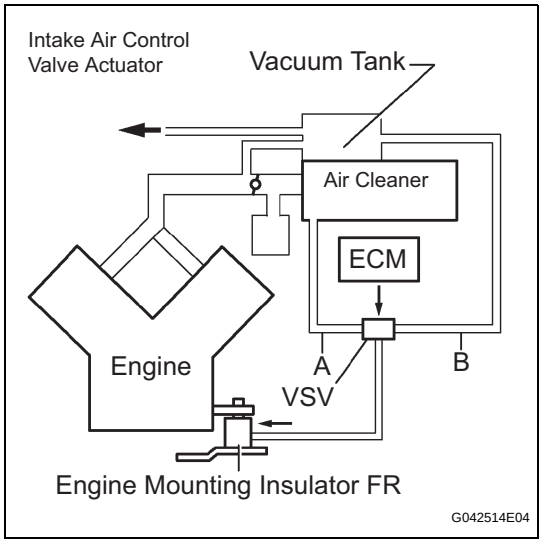

(a) If the hose is damaged, replace the vacuum hose assembly.
(b) Check the air and vacuum hoses for looseness, disconnection and blockage.

NG → **REPAIR OR REPLACE VACUUM HOSES**

OK

2 **CHECK VACUUM**

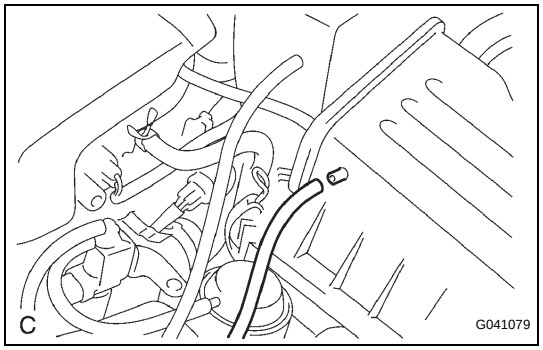

(a) Start the engine.
(b) Disconnect the vacuum hose from the air cleaner cap.
(c) Check that the disconnected port located on the vacuum tank applies suction to your finger.
OK:
Vacuum pressure exists.
(d) Reconnect the vacuum hose.

NG → **CHECK AND REPLACE VACUUM SOURCE AND HOSES**

OK

3 **INSPECT ECM**

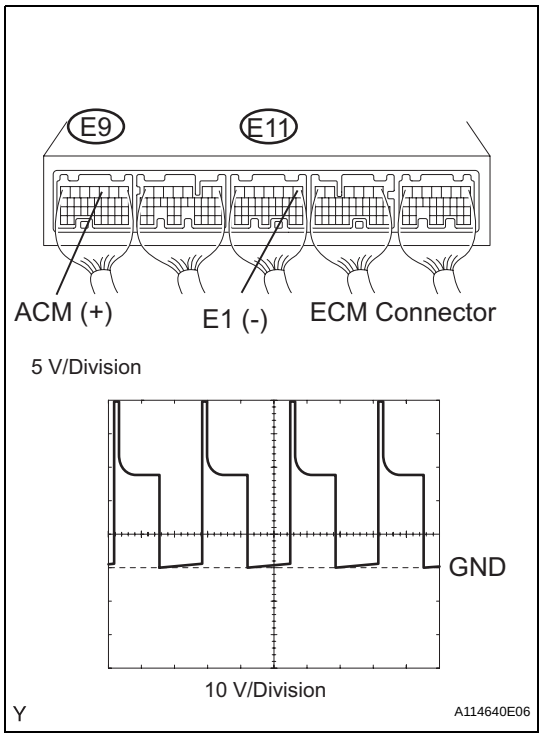

(a) Connect the oscilloscope between terminals ACM and E1 of the E9 and E11 ECM connectors.
(b) Warm up the engine to normal operating temperature.
(c) Turn the A/C switch on.
(d) Measure the voltage according to the value(s) in the table below.
Standard voltage

Condition	Voltage
Shift position is D, and engine speed is 850 rpm or less	Pulse generation
Shift position is D, and engine speed is 950 rpm or more	9 to 14 V
Shift position is P	9 to 14 V

OK → **Go to step 9**

NG

ES

4	INSPECT DUTY VACUUM SWITCHING VALVE (RESISTANCE)

Component Side:

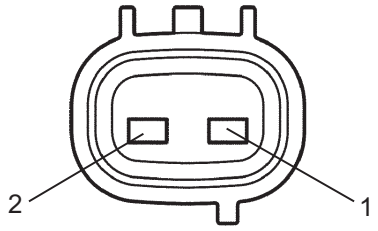

C058536E28

(a) Disconnect the V3 VSV for ACM connector.
(b) Measure the resistance according to the value(s) in the table below.
Standard resistance:
19 to 21 Ω at 20°C (68°F)
(c) Reconnect the VSV for ACM connector.

NG → **REPLACE DUTY VACUUM SWITCHING VALVE**

ES

OK

5	CHECK HARNESS AND CONNECTOR (VSV FOR ACM - ECM)

Wire Harness Side:

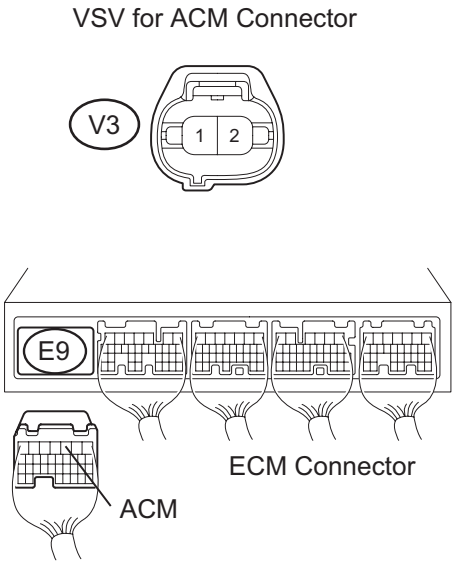

A163536E01

(a) Check the wire harness between the VSV for ACM connector and the ECM connector.
(1) Disconnect the V3 VSV for ACM connector.
(2) Disconnect the E9 ECM connector.
(3) Measure the resistance according to the value(s) in the table below.
Standard resistance:
Check for open

Tester Connection	Specified Condition
VSV for ACM (V3-2) - ACM (E9-3)	Below 1 Ω

Check for open

Tester Connection	Specified Condition
VSV for ACM (V3-2) or ACM (E9-3) - Body ground	10 kΩ or higher

(4) Reconnect the ECM connector.

NG → **REPAIR OR REPLACE HARNESS OR CONNECTOR (VSV FOR ACM - ECM)**

OK

6 INSPECT FUSE (EFI NO. 2 FUSE)

Engine Room Junction Block:

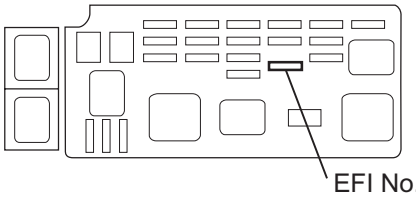

A162360E10

(a) Remove the EFI No. 2 fuse from the engine room junction block.
(b) Measure the resistance according to the value(s) in the table below.
Standard resistance:
Below 1 Ω
(c) Reinstall the EFI No. 2 fuse.

NG → **REPLACE FUSE (EFI NO. 2 FUSE)**

OK

7 INSPECT RELAY (EFI RELAY)

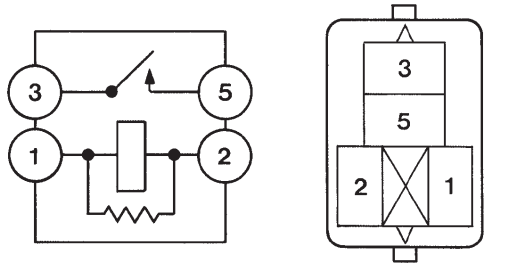

B016200

(a) Remove the EFI relay from the engine room junction block.
(b) Measure the resistance according to the value(s) in the table below.
Standard resistance

Tester Connection	Specified Condition
3 - 5	10 kΩ or higher
3 - 5	Below 1 Ω (Apply battery voltage between terminals 1 and 2)

(c) Reinstall the EFI relay.

NG → **REPLACE RELAY (EFI RELAY)**

OK

ES

8	CHECK HARNESS AND CONNECTOR (VSV FOR ACM - EFI RELAY)

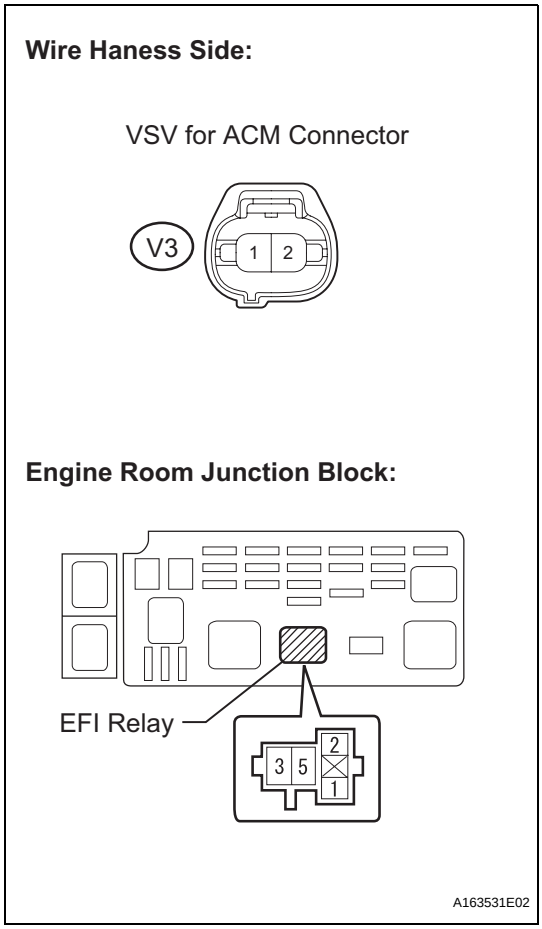

(a) Check the wire harness between the VSV for ACM and the EFI relay.
  (1) Remove the EFI relay from the engine room junction block.
  (2) Measure the resistance according to the value(s) in the table below.
  Standard resistance:
  Check for open

Tester Connection	Specified Condition
VSV for ACM (V3-1) - EFI relay terminal (3)	Below 1 Ω

  (3) Reconnect the VSV for ACM connector.
  (4) Reinstall the EFI relay.

NG → **REPAIR OR REPLACE HARNESS OR CONNECTOR (VSV FOR ACM - EFI RELAY)**

OK

CHECK ECM POWER SOURCE CIRCUIT

9	INSPECT DUTY VACUUM SWITCHING VALVE (OPERATION)

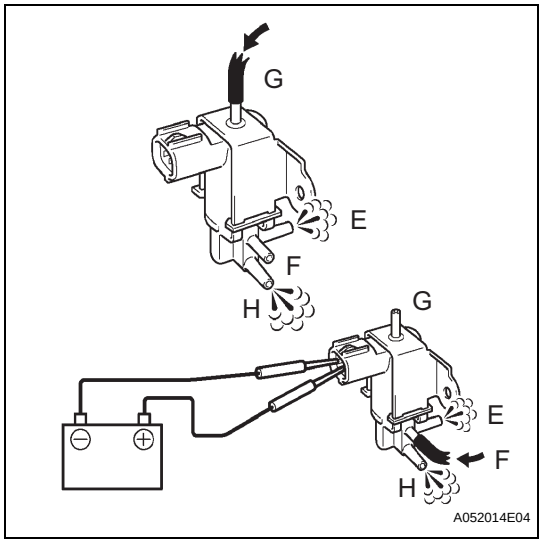

(a) Remove the VSV for ACM.
(b) Check operation of the VSV for ACM when positive battery voltage is applied to the terminals of the VSV for ACM connector.
Positive battery voltage is not applied:
The air from pipe G is flowing out through pipes E and H.
Positive battery voltage is applied:
The air from pipe F is flowing out through pipes E and H.
(c) Reinstall the VSV for ACM.

NG → **REPLACE DUTY VACUUM SWITCHING VALVE**

OK

10	INSPECT ENGINE MOUNTING INSULATOR ASSEMBLY FRONT

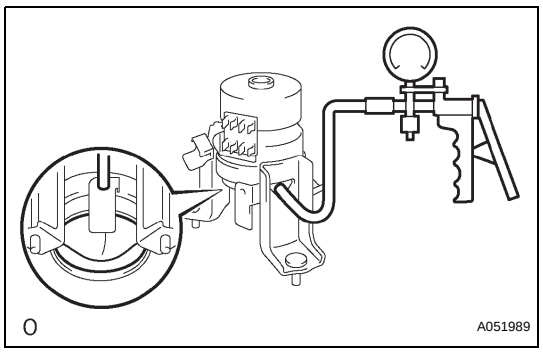

(a) Disconnect the vacuum hose from the front engine mount insulator.
(b) Using a vacuum pump, apply vacuum of 80 kPa (600 mmHg, 25 in.Hg) and wait for 1 minute.
(c) Check that there is no change in the needle movement of the vacuum pump gauge.
(d) Check that there is no fluid leakage caused by a break in the diaphragm.
OK:
Vacuum pressure exists.
(e) Reconnect the vacuum hose.

NG → **REPLACE ENGINE MOUNTING INSULATOR ASSEMBLY FRONT**

OK

SYSTEM OK

ES