DTC	P0010	Camshaft Position "A" Actuator Circuit (Bank 1)

DTC	P0020	Camshaft Position "A" Actuator Circuit (Bank 2)

DESCRIPTION

The Variable Valve Timing (VVT) system includes the ECM, Oil Control Valve (OCV) and VVT controller. The ECM sends a target duty-cycle control signal to the OCV. This control signal regulates the oil pressure supplied to the VVT controller. Camshaft timing control is performed according to engine operating conditions such as intake air volume, throttle valve position and engine coolant temperature. The ECM controls the OCV, based on the signals transmitted by several sensors. The VVT controller regulates the intake camshaft angle using oil pressure through the OCV. As a result, the relative positions of the camshaft and crankshaft are optimized, the engine torque and fuel economy improves, and the exhaust emissions decrease under overall driving conditions. The ECM detects the actual intake valve timing using signals from the camshaft and crankshaft position sensors, and performs feedback control. This is how the target intake valve timing is verified by the ECM.

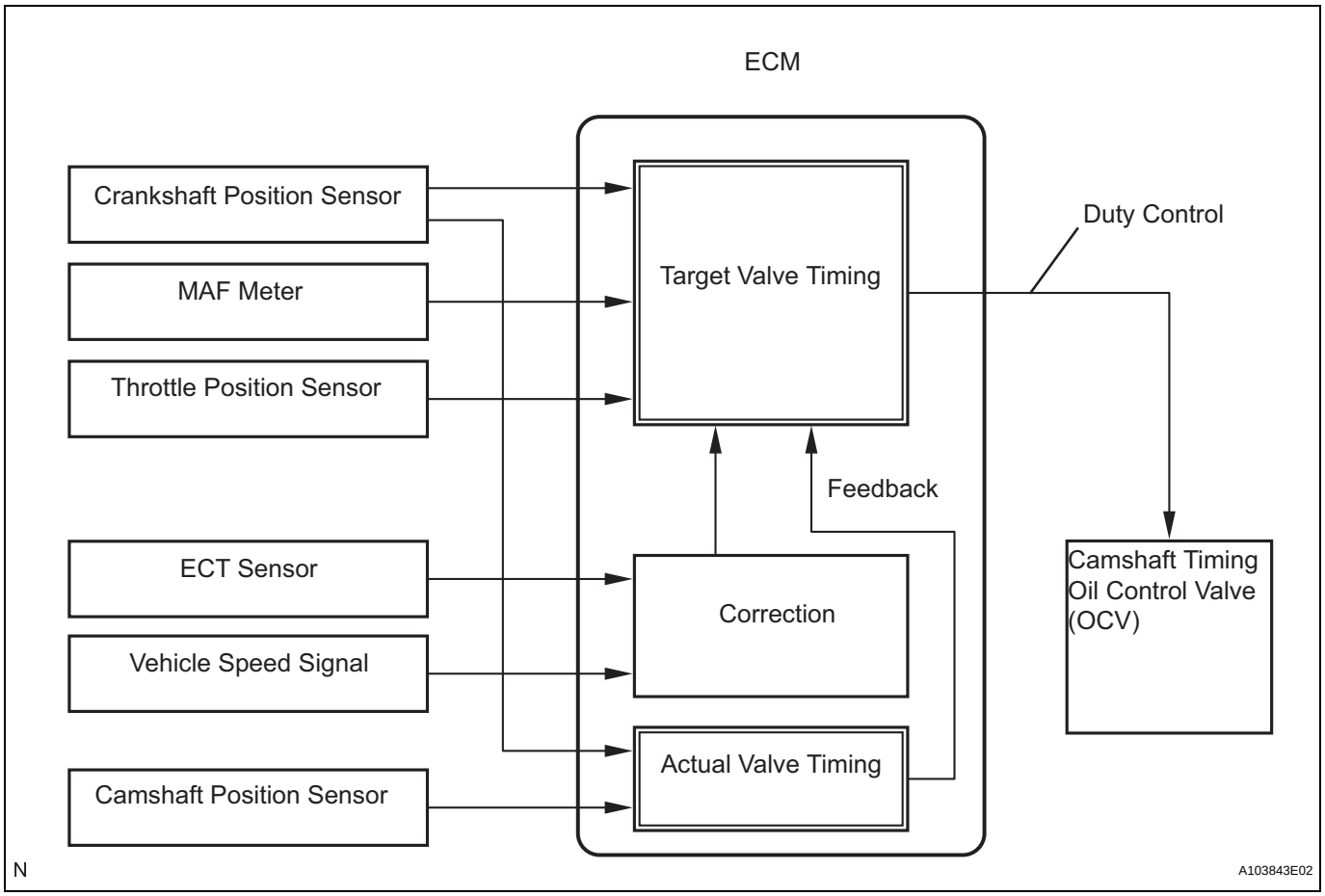

DTC No.	DTC Detection Condition	Trouble Area
P0010	Open or short in OCV for intake camshaft (bank 1) circuit (1 trip detection logic)	• Open or short in OCV for intake camshaft (bank 1) circuit • OCV for intake camshaft (bank 1) • ECM
P0020	Open or short in OCV for intake camshaft (bank 2) circuit (1 trip detection logic)	• Open or short in OCV for intake camshaft (bank 2) circuit • OCV for intake camshaft (bank 2) • ECM

MONITOR DESCRIPTION

After the ECM sends the "target" duty-cycle signal to the OCV, the ECM monitors the OCV current to establish an "actual" duty-cycle. The ECM detects a malfunction and sets a DTC when the actual duty-cycle ratio varies from the target duty-cycle ratio.

MONITOR STRATEGY

Related DTCs	P0010: VVT OCV (bank 1) open/short P0020: VVT OCV (bank 2) open/short
Required sensors / components (Main)	VVT OCV (Variable Valve Timing oil control valve)
Required sensors / components (Sub)	-
Frequency of operation	Continuous
Duration	1 second
MIL operation	Immediately
Sequence of operation	None

TYPICAL ENABLING CONDITIONS

Monitor will run whenever these DTCs are not present	None
All of the following conditions are met:	-
Starter	OFF
Engine switch	ON
Time after turning ignition switch off to on	0.5 seconds or more

TYPICAL MALFUNCTION THRESHOLDS

One of the following conditions is met:	Condition A, B or C
A. All of the following conditions are met:	-
Battery voltage	11 to 13 V
Target duty ratio	Less than 70 %
Output signal duty ratio	100 %
B. All of the following conditions are met:	-
Battery voltage	13 V or more
Target duty ratio	Less than 80 %
Output signal duty ratio	100 %
C. All of the following conditions are met:	-
Current cut status	Not cut
Output signal duty ratio	3 % or less

COMPONENT OPERATING RANGE

VVT OCV duty ratio	More than 3 %, and Less than 100 %

WIRING DIAGRAM

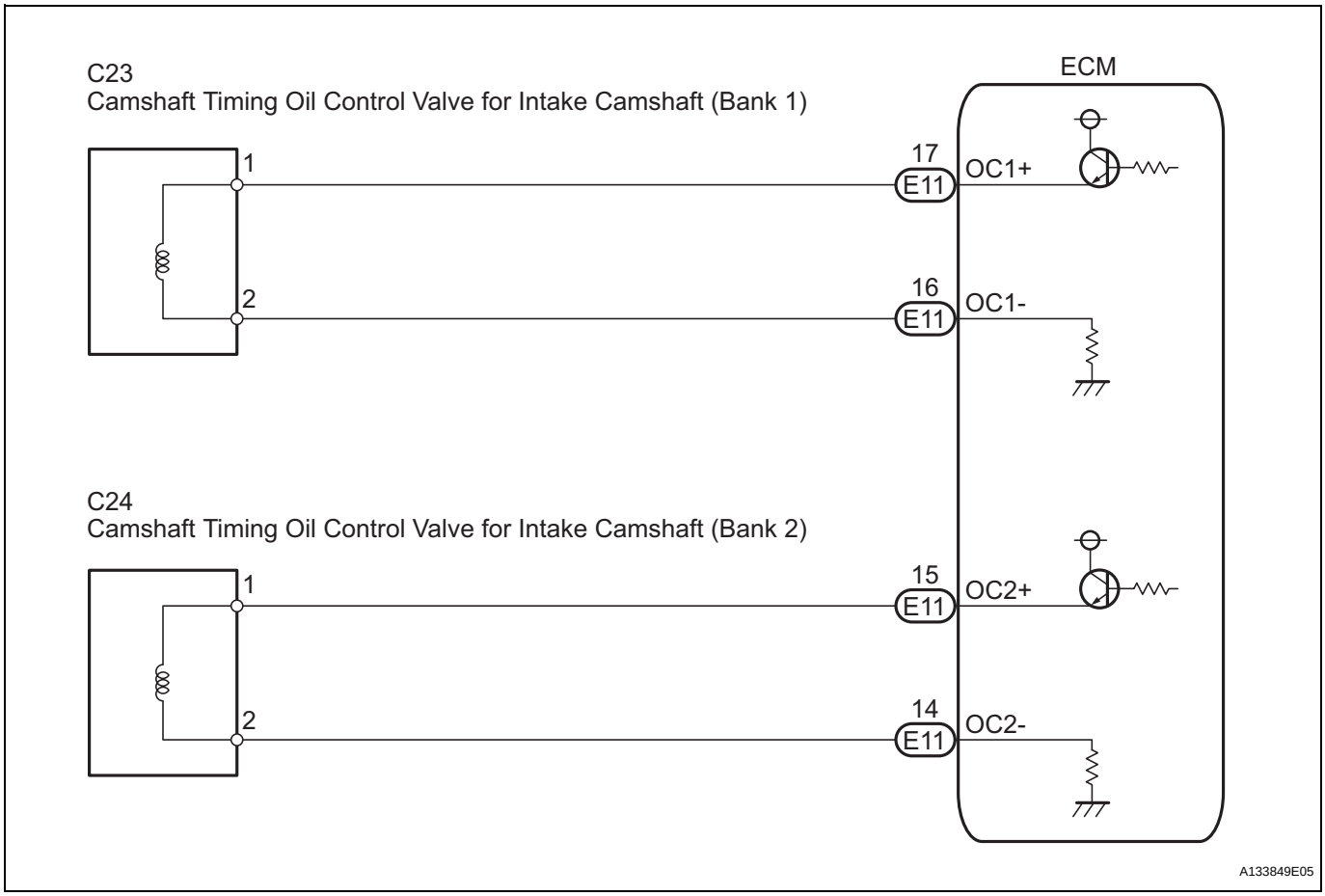

ES

INSPECTION PROCEDURE

HINT:

- If DTC P0010 is displayed, check the intake camshaft circuit for the right bank VVT system.
- Bank 1 refers to the bank that includes cylinder No. 1.
- If DTC P0020 is displayed, check the intake camshaft circuit for the left bank VVT system.
- Bank 2 refers to the bank that does not include cylinder No. 1.
- Read freeze frame data using the intelligent tester. The ECM records vehicle and driving condition information as freeze frame data the moment a DTC is stored. When troubleshooting, freeze frame data can be helpful in determining whether the vehicle was running or stopped, whether the engine was warmed up or not, whether the air-fuel ratio was lean or rich, as well as other data recorded at the time of a malfunction.

1	**PERFORM ACTIVE TEST BY CAMSHAFT TIMING OIL CONTROL VALVE ASSEMBLY (OCV)**

(a) Connect the intelligent tester to the DLC3.
(b) Start the engine and turn the tester on.
(c) Warm up the engine.
(d) On the tester, enter the following menus: DIAGNOSIS / ENHANCED OBD II / ACTIVE TEST / VVT CTRL B1 or VVT CTRL B2.
(e) Check the engine speed while operating the Oil Control Valve (OCV) using the tester.

OK

Tester Operation	Specified Condition
OCV OFF	Normal engine speed
OCV ON	Engine idles roughly or stalls (soon after OCV switched from OFF to ON)

OK → **CHECK FOR INTERMITTENT PROBLEMS (See page ES-13)**

NG

2 INSPECT CAMSHAFT TIMING OIL CONTROL VALVE ASSEMBLY

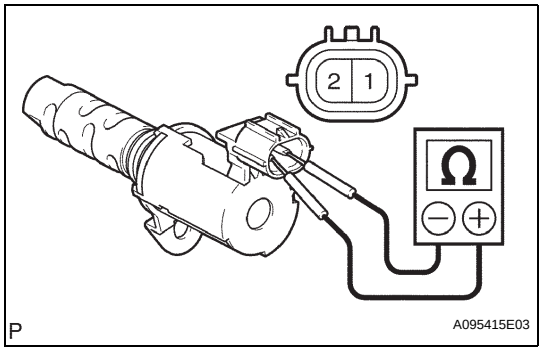

(a) Disconnect the C23 or C24 camshaft timing oil control valve (OCV) connector.

(b) Measure the resistance according to the value(s) in the table below.

Standard resistance

Tester Connection	Condition	Specified Condition
1 - 2	20°C (68°F)	6.9 to 7.9 Ω

(c) Reconnect the OCV connector.

NG → **REPLACE CAMSHAFT TIMING OIL CONTROL VALVE ASSEMBLY (See page ES-486)**

OK

3	CHECK HARNESS AND CONNECTOR (OCV - ECM)

Wire Harness Side Front View:

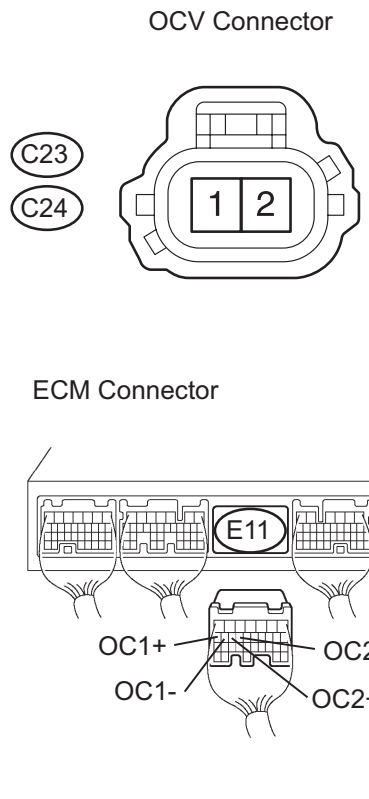

(a) Disconnect the C23 or C24 camshaft timing oil control valve (OCV) connector.
(b) Disconnect the E11 ECM connector.
(c) Measure the resistance according to the value(s) in the table below.

Standard resistance (Check for open)

Tester Connection	Specified Condition
OC1+ (E11-17) - C23-1	Below 1 Ω
OC1- (E11-16) - C23-2	Below 1 Ω
OC2+ (E11-15) - C24-1	Below 1 Ω
OC2- (E11-14) - C24-2	Below 1 Ω

Standard resistance (Check for short)

Tester Connection	Specified Condition
OC1+ (E11-17) or C23-1 - Body ground	10 kΩ or higher
OC1- (E11-16) or C23-2 - Body ground	10 kΩ or higher
OC2+ (E11-15) or C24-1 - Body ground	10 kΩ or higher
OC2- (E11-14) or C24-2 - Body ground	10 kΩ or higher

(d) Reconnect the OCV connector.
(e) Reconnect the ECM connector.

NG → **REPAIR OR REPLACE HARNESS OR CONNECTOR (OCV - ECM)**

OK

REPLACE ECM (See page ES-498)

ES