DTC	P0120	Throttle / Pedal Position Sensor / Switch "A" Circuit
DTC	P0122	Throttle / Pedal Position Sensor / Switch "A" Circuit Low Input
DTC	P0123	Throttle / Pedal Position Sensor / Switch "A" Circuit High Input
DTC	P0220	Throttle / Pedal Position Sensor / Switch "B" Circuit
DTC	P0222	Throttle / Pedal Position Sensor / Switch "B" Circuit Low Input
DTC	P0223	Throttle / Pedal Position Sensor / Switch "B" Circuit High Input
DTC	P2135	Throttle / Pedal Position Sensor / Switch "A" / "B" Voltage Correlation

HINT:
These DTCs relate to the Throttle Position (TP) sensor.

DESCRIPTION

HINT:
This ETC (Electrical Throttle Control System) does not use a throttle cable.
The Throttle Position (TP) sensor is mounted on the throttle body, and detects the opening angle of the throttle valve. This sensor is a non-contact type, and uses Hall-effect elements, in order to yield accurate signals, even in extreme driving conditions, such as at high speeds as well as very low speeds.
The TP sensor has two sensor circuits which each transmits a signal, VTA1 and VTA2. VTA1 is used to detect the throttle valve angle and VTA2 is used to detect malfunctions in VTA1. The sensor signal voltages vary between 0 V and 5 V in proportion to the throttle valve opening angle, and are transmitted to the VTA terminals of the ECM.
As the valve closes, the sensor output voltage decreases and as the valve opens, the sensor output voltage increases. The ECM calculates the throttle valve opening angle according to these signals and controls the throttle actuator in response to driver inputs. These signals are also used in calculations such as air-fuel ratio correction, power increase correction and fuel-cut control.

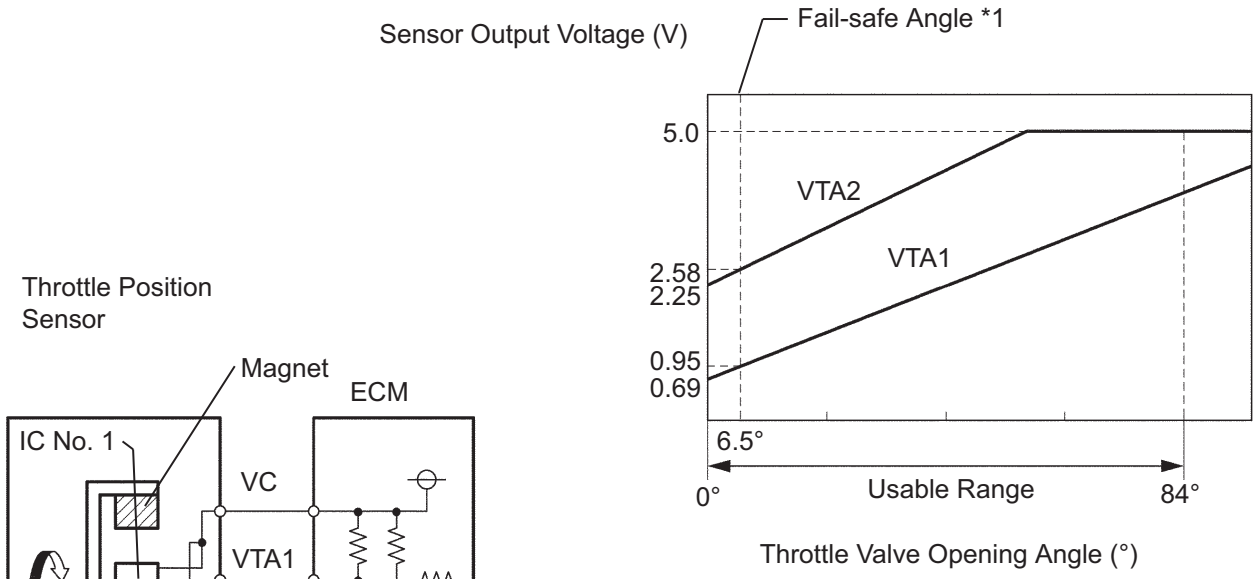

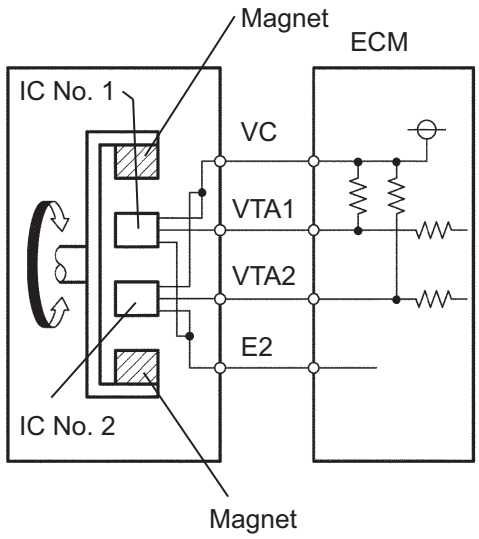

Throttle Valve Fully Closed
(Throttle Position expressed as percentage (VTA1) 10 to 24%)

Throttle Valve Fully Opened
(Throttle Position expressed as percentage (VTA1) 64 to 96%)

*1: Fail Safe Angel 6.5° (Thottle Position expressed as percentage (VTA1)/(VTA) about 16%)

A019802E61

DTC No.	DTC Detection Condition	Trouble Area
P0120	Output voltage of VTA1 quickly fluctuates beyond lower and upper malfunction thresholds for 2 seconds (1 trip detection logic)	• Throttle Position (TP) sensor (built into throttle body) • ECM
P0122	Output voltage of VTA1 is 0.2 V or less for 2 seconds (1 trip detection logic)	• TP sensor (built into throttle body) • Short in VTA1 circuit • Open in VC circuit • ECM
P0123	Output voltage of VTA1 is 4.535 V or more for 2 seconds (1 trip detection logic)	• TP sensor (built into throttle body) • Open in VTA1 circuit • Open in E2 circuit • Short between VC and VTA1 circuits • ECM
P0220	Output voltage of VTA2 quickly fluctuates beyond lower and upper malfunction thresholds for 2 seconds (1 trip detection logic)	• TP sensor (built into throttle body) • ECM

DTC No.	DTC Detection Condition	Trouble Area
P0222	Output voltage of VTA2 is 1.75 V or less for 2 seconds (1 trip detection logic)	• TP sensor (built into throttle body) • Short in VTA2 circuit • Open in VC circuit • ECM
P0223	Output voltage of VTA2 is 4.8 V or more, and VTA1 is between 0.2 V and 2.02 V, for 2 seconds (1 trip detection logic)	• TP sensor (built into throttle body) • Open in VTA2 circuit • Open in E2 circuit • Short between VC and VTA2 circuits • ECM
P2135	Either condition (a) or (b) is met (1 trip detection logic): (a) Difference between output voltages of VTA1 and VTA2 is 0.02 V or less for 0.5 seconds or more (b) Output voltage of VTA1 is 0.2 V or less, and VTA2 is 0.5 V or less, for 0.4 seconds or more	• Short between VTA1 and VTA2 circuits • TP sensor (built into throttle body) • ECM

ES

HINT:

- When any of these DTCs are set, check the throttle valve opening angle by selecting the following menu items on the intelligent tester: DIAGNOSIS / ENHANCED OBD II / DATA LIST / ETCS / THROTTLE POS AND THROTTLE POS #2.
- THROTTLE POS denotes the VTA1 signal (expressed in percentages), and THROTTLE POS #2 denotes the VTA2 signal (expressed in voltages).

Reference (Normal Condition)

Tester Display	Accelerator Pedal Fully Released	Accelerator Pedal Fully Depressed
THROTTLE POS	10 to 24%	64 to 96%
THROTTLE POS #2	2.1 to 3.1 V	4.5 to 5.0 V

MONITOR DESCRIPTION

The ECM uses the Throttle Position (TP) sensor to monitor the throttle valve opening angle. There are several checks that the ECM performs to confirm the proper operation of the TP sensor.

- A specific voltage difference is expected between the sensor terminals, VTA1 and VTA2, for each throttle valve opening angle. If the difference between VTA1 and VTA2 is incorrect, the ECM interprets this as a malfunction in the sensor, and sets a DTC.
- VTA1 and VTA2 each have a specific voltage range. If VTA1 or VTA2 is outside the normal operating range, the ECM interprets this as a malfunction in the sensor, and sets a DTC.
- VTA1 and VTA2 should never be close to the same voltage level. If VTA1 is within 0.02 V of VTA2, the ECM determines that there is a short circuit in the sensor, and sets a DTC.

If the malfunction is not repaired successfully, a DTC is set 2 seconds after the engine is next started.

MONITOR STRATEGY

Related DTCs	P0120: Throttle position sensor 1 range check (Fluctuating) P0122: Throttle position sensor 1 range check (Low voltage) P0123: Throttle position sensor 1 range check (High voltage) P0220: Throttle position sensor 2 range check (Fluctuating) P0222: Throttle position sensor 2 range check (Low voltage) P0223: Throttle position sensor 2 range check (High voltage) P2135: Throttle position sensor range check (Correlation)
Required Sensors / Components (Main)	Throttle position sensor
Required Sensors / Components (Related)	-
Frequency of Operation	Continuous
Duration	2 seconds: P0120, P0122, P0123, P0220, P0222 and P0223 (Accelerator pedal ON) 10 seconds: P0120, P0122, P0123, P0220, P0222 and P0223 (Accelerator pedal OFF) 0.5 seconds: P2135
MIL Operation	Immediate
Sequence of Operation	None

TYPICAL ENABLING CONDITIONS

The monitor will run whenever these DTCs are not present	None

TYPICAL MALFUNCTION THRESHOLDS

P0120:

VTA1 voltage	0.2 V or less, or 4.535 V or more

P0122:

VTA1 voltage	0.2 V or less

ES

P0123:

VTA1 voltage	4.535 V or more

P0220:

VTA2 voltage	1.75 V or less, or 4.8 V or more

P0222:

VTA2 voltage	1.75 V or less

P0223:

VTA2 voltage when VTA1 0.2 V to 2.02 V	4.8 V or more

P2135:

Either of following conditions A or B is met:	-
Condition A	-
Difference between VTA1 and VTA2 voltages	0.02 V or less
Condition B	-
Both of the following conditions are met	(a) or (b)
(a) VTA1 voltage	0.2 V or less
(b) VTA2 voltage	1.75 V or less

COMPONENT OPERATING RANGE

VTA1 voltage	0.2 to 4.535 V
VTA2 voltage	1.75 to 4.8 V

FAIL-SAFE

When any of these DTCs, as well as other DTCs relating to ETCS (Electronic Throttle Control System) malfunctions, are set, the ECM enters fail-safe mode. During fail-safe mode, the ECM cuts the current to the throttle actuator off, and the throttle valve is returned to a 6.5° throttle angle by the return spring. The ECM then adjusts the engine output by controlling the fuel injection (intermittent fuel-cut) and ignition timing, in accordance with the accelerator pedal opening angle, to allow the vehicle to continue at a minimal speed. If the accelerator pedal is depressed slowly, the vehicle can be driven slowly.
Fail-safe mode continues until a pass condition is detected, and the ignition switch is turned off.

WIRING DIAGRAM

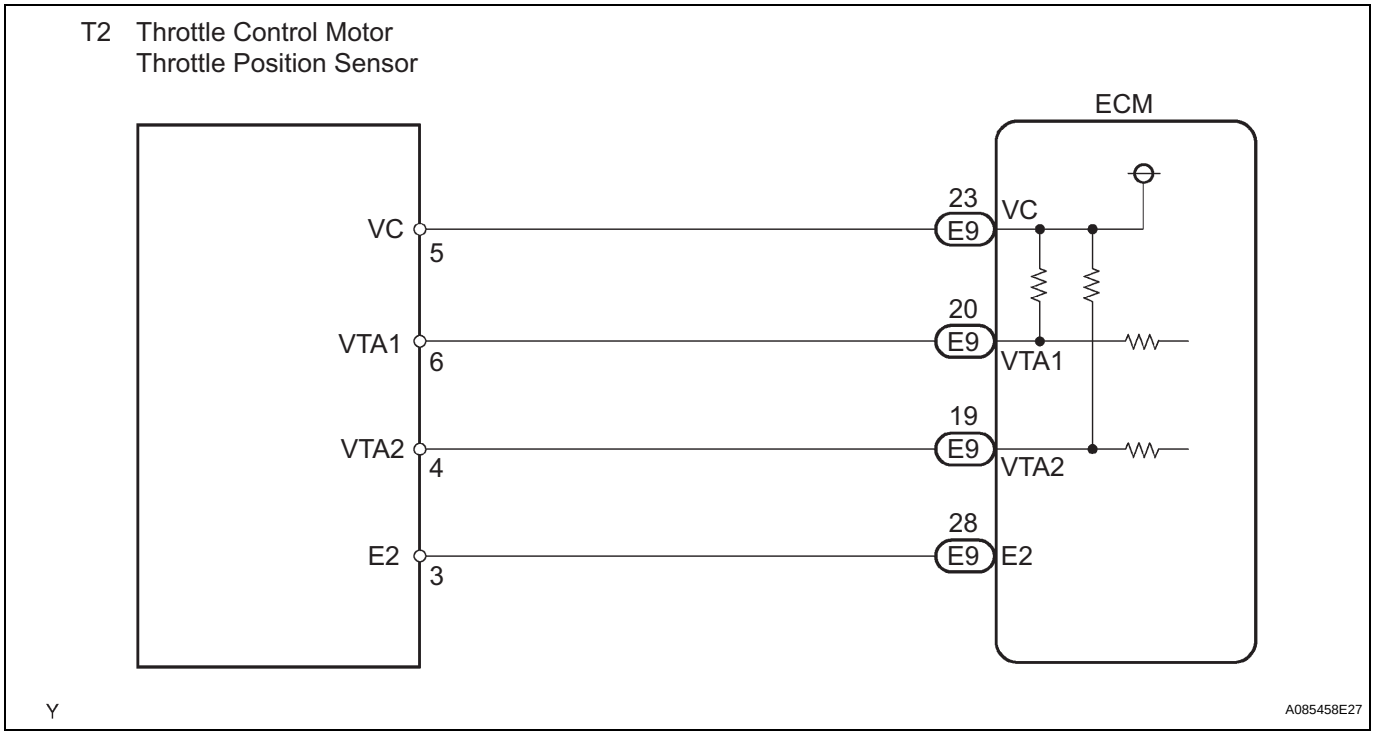

INSPECTION PROCEDURE

HINT:

- If other DTCs relating to different systems that have terminal E2 as the ground terminal are output simultaneously, terminal E2 may have an open circuit.
- Read freeze frame data using the intelligent tester. The ECM records vehicle and driving condition information as freeze frame data the moment a DTC is stored. When troubleshooting, freeze frame data can be helpful in determining whether the vehicle was running or stopped, whether the engine was warmed up or not, whether the air-fuel ratio was lean or rich, as well as other data recorded at the time of a malfunction.

1	READ VALUE OF INTELLIGENT TESTER (THROTTLE POS AND THROTTLE POS #2)

(a) Connect the intelligent tester to the DLC3.
(b) Turn the ignition switch to the ON position and turn the intelligent tester on.
(c) Select the following menu items: DIAGNOSIS / ENHANCED OBD II / DATA LIST / ETCS / THROTTLE POS and THROTTLE POS #2.
(d) Check the values displayed on the tester.

Result

TP#1 (VTA1) When AP Released	TP#2 (VTA2) When AP Released	TP#1 (VTA1) When AP Depressed	TP#2 (VTA2) When AP Depressed	Trouble Area	Proceed to
0%	Between 0 V and 0.2 V	0%	Between 0 V and 0.2 V	VC circuit open	A
100%	Between 4.5 V and 5.0 V	100 %	Between 4.5 V and 5.0 V	E2 circuit open	A
0% or 100%	Between 2.1 V and 3.1 V (Fail-safe)	0% or 100%	Between 2.1 V and 3.1 V (Fail-safe)	VTA1 circuit open or ground short	A

TP#1 (VTA1) When AP Released	TP#2 (VTA2) When AP Released	TP#1 (VTA1) When AP Depressed	TP#2 (VTA2) When AP Depressed	Trouble Area	Proceed to
Approx. 19% (Fail-safe)	Between 0 V and 0.2 V, or 4.5 V and 5.0 V	Between 10% and 24% (Fail-safe)	Between 0 V and 0.2 V, or 4.5 V and 5.0 V	VTA2 circuit open or ground short	A
Between 10% and 24%	Between 2.1 V and 3.1 V	Between 64% and 96% (Not fail-safe)	Between 4.5 V and 5.0 V (Not fail-safe)	TP sensor circuit normal	B

HINT:
- TP#1 denotes THROTTLE POS, and TP#2 denotes THROTTLE POS#2.
- AP denotes Accelerator Pedal.
- VTA1 is expressed as percentage, and VTA2 is expressed as voltage.

ES

B → **Go to step 5**

A

2 CHECK HARNESS AND CONNECTOR (THROTTLE POSITION SENSOR - ECM)

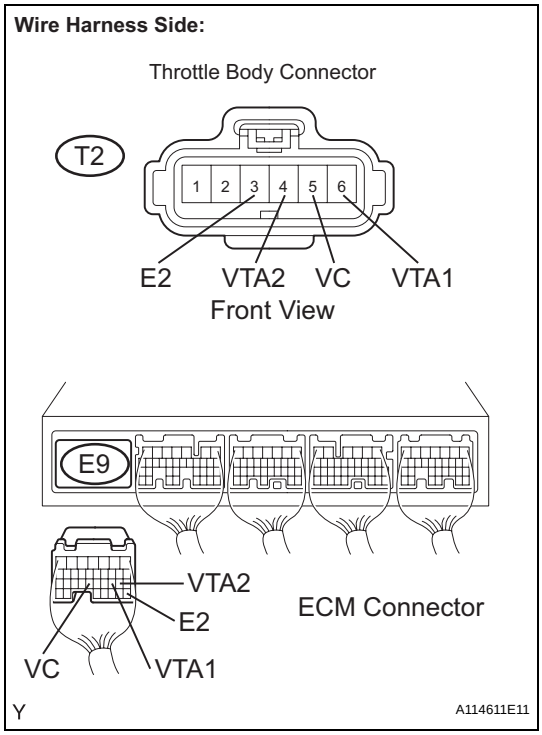

(a) Disconnect the T2 throttle body connector.
(b) Disconnect the E9 ECM connector.
(c) Measure the resistance according to the value(s) in the table below.

Standard resistance:

Check for open

Tester Connection	Specified Condition
VC (T2-5) - VC (E9-23)	Below 1 Ω
VTA1 (T2-6) - VTA1 (E9-20)	Below 1 Ω
VTA2 (T2-4) - VTA2 (E9-19)	Below 1 Ω
E2 (T2-3) - E2 (E9-28)	Below 1 Ω

Check for short

Tester Connection	Specified Condition
VC (T2-5) or VC (E9-23) - Body ground	10 kΩ or higher
VTA1 (T2-6) or VTA1 (E9-20) - Body ground	10 kΩ or higher
VTA2 (T2-4) or VTA2 (E9-19) - Body ground	10 kΩ or higher

(d) Reconnect the throttle body connector.
(e) Reconnect the ECM connector.

NG → **REPAIR OR REPLACE HARNESS OR CONNECTOR (THROTTLE POSITION SENSOR - ECM)**

OK

3 INSPECT ECM (VC VOLTAGE)

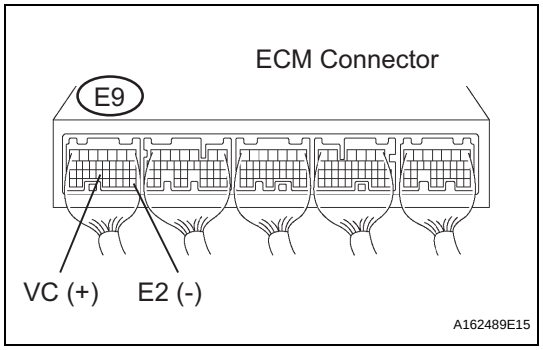

(a) Disconnect the T2 throttle body connector.
(b) Turn the ignition switch to the ON position.
(c) Measure the voltage according to the value(s) in the table below.

Standard voltage

Tester Connection	Specified Condition
VC (E9-23) - E2 (E9-28)	4.5 to 5.0 V

(d) Reconnect the throttle with motor body connector.

NG → **REPLACE ECM (See page ES-498)**

OK

4 REPLACE THROTTLE BODY

(a) Replace the throttle body (See page ES-493).

NEXT

5 CHECK WHETHER DTC OUTPUT RECURS (THROTTLE POSITION SENSOR DTCS)

(a) Connect the intelligent tester to the DLC3.
(b) Turn the ignition switch to the ON position and turn the tester on.
(c) Clear the DTCs (See page ES-39).
(d) Start the engine.
(e) Allow the engine to idle for 15 seconds or more.
(f) Select the following menu items: DIAGNOSIS / ENHANCED OBD II / DTC INFO / CURRENT CODES.
(g) Read the DTCs.

Result

Display (DTC Output)	Proceed to
P0120, P0122, P0123, P0220, P0222, P0223 and/or P2135	A
No output	B

B → **SYSTEM OK**

A

REPLACE ECM (See page ES-498)

ES