DTC	P0340	Camshaft Position Sensor "A" Circuit (Bank 1 or Single Sensor)
DTC	P0342	Camshaft Position Sensor "A" Circuit Low Input (Bank 1 or Single Sensor)
DTC	P0343	Camshaft Position Sensor "A" Circuit High Input (Bank 1 or Single Sensor)
DTC	P0345	Camshaft Position Sensor "A" Circuit (Bank 2)
DTC	P0347	Camshaft Position Sensor "A" Circuit Low Input (Bank 2)
DTC	P0348	Camshaft Position Sensor "A" Circuit High Input (Bank 2)

DESCRIPTION

The intake camshaft's Variable Valve Timing (VVT) sensor (G signal) consists of a magnet and MRE (Magneto Resistance Element).

The VVT camshaft drive gear has a sensor plate with 3 teeth on its outer circumference. When the gear rotates, changes occur in the air gaps between the sensor plate and MRE, which affects the magnetic field. As a result, the resistance of the MRE material fluctuates. The VVT sensor converts the gear rotation data to pulse signals, uses the pulse signals to determine the camshaft angle, and sends it to the ECM.

The crankshaft angle sensor plate has 34 teeth. The pickup coil generates 34 signals for each engine revolution. Based on combination of the G signal and NE signal, the ECM detects the crankshaft angle. Then the ECM uses this data to control fuel injection time and injection timing. Also, based on the NE signal, the ECM detects the engine speed.

DTC No.	DTC Detection Condition	Trouble Area
P0340 P0345	• Input voltage to ECM remains 0.3 V or less, or 4.7 V or higher for more than 5 seconds, when 2 or more seconds have elapsed after turning ignition switch ON (2 trip detection logic) • No VVT sensor signal to ECM during cranking (1 trip detection logic)	• Open or short in VVT sensor circuit for intake camshaft • VVT sensor for intake camshaft • Camshaft timing gear for intake camshaft • Jumped tooth of timing chain for intake camshaft • ECM
P0342 P0347	Output voltage of VVT sensor is 0.3 V or less for 5 seconds (1 trip detection logic)	• Open or short in VVT sensor circuit for intake camshaft • VVT sensor for intake camshaft • Camshaft timing gear for intake camshaft • Jumped tooth of timing chain for intake camshaft • ECM
P0343 P0348	Output voltage of VVT sensor is 4.7 V or more for 5 seconds (1 trip detection logic)	• Open or short in VVT sensor circuit for intake camshaft • VVT sensor for intake camshaft • Camshaft timing gear for intake camshaft • Jumped tooth of timing chain for intake camshaft • ECM

Reference: Inspection using an oscilloscope

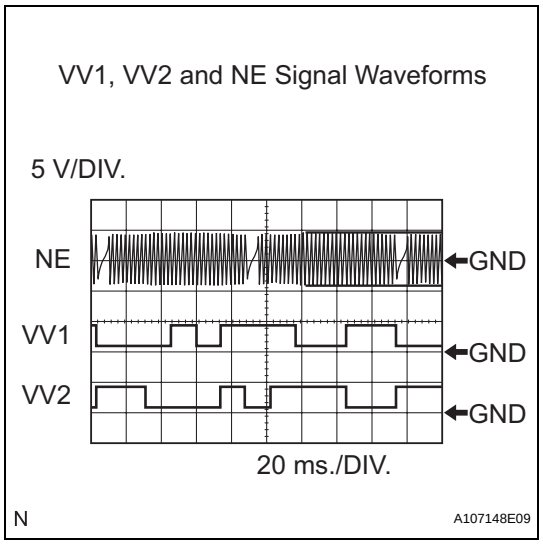

HINT:
- The correct waveform is shown in the illustration.
- VV1+ and VV2+ stand for the VVT sensor signal, and NE+ stands for the CKP sensor signal.

Item	Content
Terminals	NE+ - NE- VV1+ - VV1- VV2+ - VV2-
Equipment Settings	5 V/Division, 20 ms./Division
Conditions	Cranking or idling

MONITOR DESCRIPTION

If no signal is transmitted by the VVT sensor despite the engine revolving, or the rotations of the camshaft and the crankshaft are not synchronized, the ECM interprets this as a malfunction of the sensor.

MONITOR STRATEGY

Related DTCs	P0340: Camshaft position sensor (Bank 1) open/short P0340: Camshaft position/Crankshaft position misalignment (Bank 1) P0340: Camshaft position sensor (Bank 1) range check (Chattering) P0342: Camshaft position sensor (Bank 1) range check (low voltage) P0343: Camshaft position sensor (Bank 1) range check (high voltage) P0345: VVT sensor (Bank 2) open/short P0345: VVT position/Crankshaft position misalignment (Bank 2) P0345: VVT position sensor (Bank 2) range check (Chattering) P0347: VVT position sensor (Bank 2) range check (low voltage) P0348: VVT position sensor (Bank 2) range check (high voltage)
Required Sensors / Components (Main)	VVT position sensor (Bank 1 and 2)
Required Sensors / Components (Related)	Crankshaft position sensor
Frequency of Operation	Continuous
Duration	4 seconds: P0340 (Camshaft position sensor range check), P0340, P0342, P0343 (Camshaft position sensor range check (Chattering, Low voltage, High voltage)) P0345 (VVT sensor range check (While starting engine)), P0345, P0347, P0348 (VVT sensor range check (Chattering, Low voltage, High voltage)) 5 seconds: Others
MIL Operation	2 driving cycles: P0340 (Camshaft position sensor range check), P0345 (VVT sensor range check (While starting engine)) Immediate: Others
Sequence of Operation	None

TYPICAL ENABLING CONDITIONS

All:

The monitor will run whenever these DTCs are not present	None

Camshaft Position Sensor Range Check:

Starter	ON and not starter ON again
Minimal battery voltage while starter ON	Less than 11 V

Camshaft Position/Crankshaft Position Misalignment:

Engine RPM	600 rpm or more
Starter	OFF

ES

Camshaft Position Sensor Range Check (Chattering, Low voltage, High voltage):

Starter	OFF
Ignition switch ON and time after ignition switch is OFF to ON	2 seconds or more

VVT sensor range check (While starting engine):

Starter	ON
Battery voltage while starter ON once at least	Less than 11 V

VVT sensor range check (After starting engine):

Engine RPM	600 rpm or more
Starter	OFF
Battery voltage	8 V or more
Ignition switch	ON

VVT sensor range check (Chattering, Low voltage, High voltage):

Starter	OFF
Ignition switch ON and time after ignition switch is OFF to ON	2 seconds or more
Battery voltage	8 V or more

TYPICAL MALFUNCTION THRESHOLDS

Camshaft Position Sensor Range Check:

Camshaft position signal	No signal

Camshaft Position/Crankshaft Position Misalignment:

Camshaft position and crankshaft position phase	Mis-aligned

Camshaft Position Sensor Range Check (Fluctuating):

Camshaft position voltage	Less than 0.3 V, or more than 4.7 V

Camshaft Position Sensor Range Check (Low voltage):

Camshaft position voltage	Less than 0.3 V

Camshaft Position Sensor Range Check (High voltage):

Camshaft position voltage	More than 4.7 V

VVT sensor range check (While starting engine):

VVT sensor signal	No signal

VVT sensor range check (After starting engine):

VVT sensor signal	No signal

VVT sensor range check (Fluctuating):

VVT sensor voltage	Less than 0.3 V, or more than 4.7 V

VVT sensor range check (Low voltage):

VVT sensor voltage	Less than 0.3 V

VVT sensor range check (High voltage):

VVT sensor voltage	More than 4.7 V

COMPONENT OPERATING RANGE

VVT sensor voltage	0.3 to 4.7 V

ES

WIRING DIAGRAM

Refer to DTC P0335 (See page ES-222).

INSPECTION PROCEDURE

HINT:

Read freeze frame data using the intelligent tester. The ECM records vehicle and driving condition information as freeze frame data the moment a DTC is stored. When troubleshooting, freeze frame data can be helpful in determining whether the vehicle was running or stopped, whether the engine was warmed up or not, whether the air-fuel ratio was lean or rich, as well as other data recorded at the time of a malfunction.

1	CHECK HARNESS AND CONNECTOR (SENSOR POWER SOURCE)

Wire Harness Side:

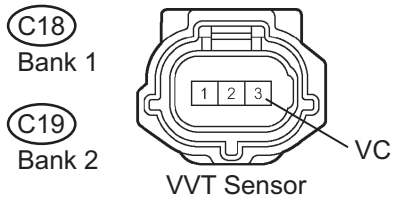

(a) Disconnect the C18 or C19 VVT sensor connector.

(b) Measure the voltage according to the value(s) in the table below.

Standard voltage

Tester Connection	Specified Condition
VC (C18-3) - Body ground	4.5 to 5.0 V
VC (C19-3) - Body ground	4.5 to 5.0 V

(c) Reconnect the VVT sensor connector.

NG → **Go to step 7**

OK

2 CHECK HARNESS AND CONNECTOR (VVT SENSOR - ECM)

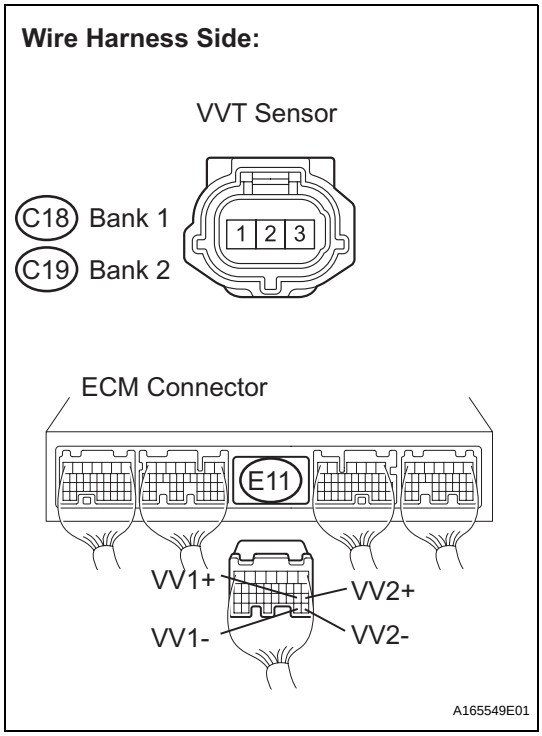

(a) Disconnect the C18 or C19 VVT sensor connector.
(b) Disconnect the E11 ECM connector.
(c) Measure the resistance according to the value(s) in the table below.

Standard resistance :

Check for open

Tester Connection	Specified Condition
VVR+ (C18-1) - VV1+ (E11-19)	Below 1 Ω
VVL+ (C19-1) - VV2+ (E11-18)	Below 1 Ω
VVR- (C18-2) - VV1- (E11-29)	Below 1 Ω
VVL- (C19-2) - VV2- (E11-28)	Below 1 Ω

Check for short

Tester Connection	Specified Condition
VVR+ (C18-1) or VV1+ (E11-19) - Body ground	10 kΩ or higher
VVL+ (C19-1) or VV2+ (E11-18) - Body ground	10 kΩ or higher
VVR- (C18-2) or VV1- (E11-29) - Body ground	10 kΩ or higher
VVL- (C19-2) or VV2- (E11-28) - Body ground	10 kΩ or higher

(d) Reconnect the VVT sensor connector.
(e) Reconnect the ECM connector.

NG → **REPAIR OR REPLACE HARNESS OR CONNECTOR (VVT SENSOR - ECM)**

OK

3 CHECK SENSOR INSTALLATION (VVT SENSOR)

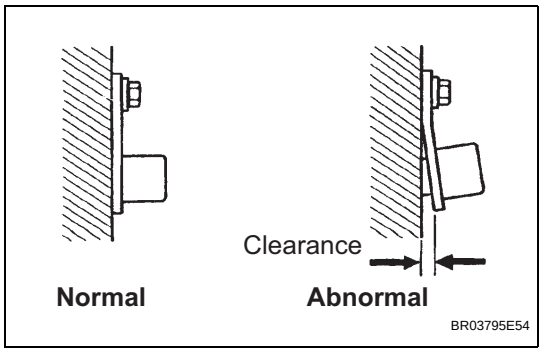

(a) Check the VVT sensor installation condition.

OK:

Sensor is installed correctly.

NG → **REPAIR OR REPLACE VVT SENSOR**

OK

4 CHECK CAMSHAFT TIMING GEAR ASSEMBLY (TEETH OF PLATE)

(a) Check the teeth of the signal plate.

OK:

Sensor plate teeth do not have any cracks or deformation.

NG → **REPLACE CAMSHAFT TIMING GEAR ASSEMBLY**

OK

5	REPLACE VVT SENSOR

(a) Replace the VVT sensor (See page ES-509).

NEXT

6	CHECK WHETHER DTC OUTPUT RECURS

(a) Connect the intelligent tester to the DLC3.
(b) Turn the ignition switch to the ON position.
(c) Turn the intelligent tester on.
(d) Clear the DTCs.
(e) Select the following menu items: DIAGNOSIS / ENHANCED OBD II / DTC / INFO / PENDING CODES.
(f) Read the DTCs.

Result

Display (DTC Output)	Proceed to
No output	A
P0340, P0342, P0343, P0345, P0347 or P0348	B

HINT:
If the engine does not start, replace the ECM.

B → **REPLACE ECM (See page ES-498)**

A

END

7	CHECK HARNESS AND CONNECTOR (VVT SENSOR - ECM)

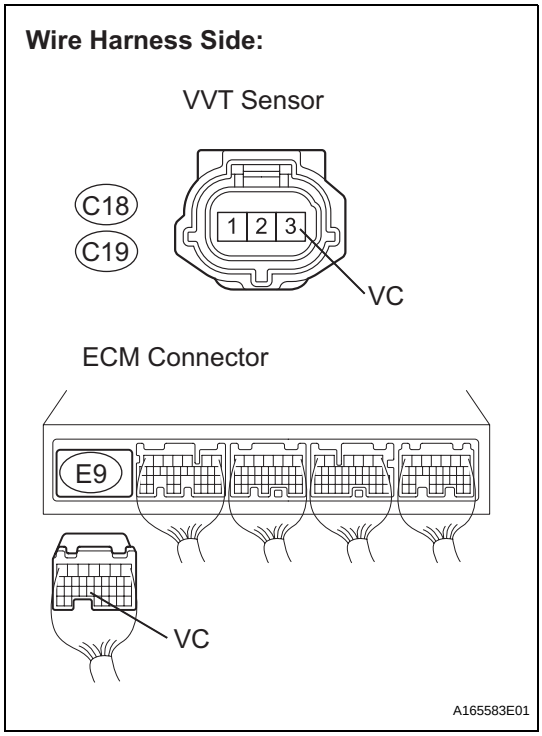

(a) Disconnect the C18 or C19 VVT sensor connector.
(b) Disconnect the E9 ECM connector.
(c) Measure the resistance according to the value(s) in the table below.

Standard resistance :

Check for open

Tester Connection	Specified Condition
VC (C18-3) - VC (E9-23)	Below 1 Ω
VC (C19-3) - VC (E9-23)	Below 1 Ω

Check for short

Tester Connection	Specified Condition
VC (C18-3) or VC (E9-23) - Body ground	10 kΩ or higher
VC (C19-3) or VC (E9-23) - Body ground	10 kΩ or higher

(d) Reconnect the VVT sensor connector.
(e) Reconnect the ECM connector.

NG → **REPAIR OR REPLACE HARNESS OR CONNECTOR (VVT SENSOR - ECM)**

OK

REPLACE ECM (See page ES-498)