DTC	P0351	Ignition Coil "A" Primary / Secondary Circuit
DTC	P0352	Ignition Coil "B" Primary / Secondary Circuit
DTC	P0353	Ignition Coil "C" Primary / Secondary Circuit
DTC	P0354	Ignition Coil "D" Primary / Secondary Circuit
DTC	P0355	Ignition Coil "E" Primary / Secondary Circuit
DTC	P0356	Ignition Coil "F" Primary / Secondary Circuit

HINT:
- These DTCs indicate malfunctions relating to the primary circuit.
- If DTC P0351 is set, check the No. 1 ignition coil with igniter circuit.
- If DTC P0352 is set, check the No. 2 ignition coil with igniter circuit.
- If DTC P0353 is set, check the No. 3 ignition coil with igniter circuit.
- If DTC P0354 is set, check the No. 4 ignition coil with igniter circuit.
- If DTC P0355 is set, check the No. 5 ignition coil with igniter circuit.
- If DTC P0356 is set, check the No. 6 ignition coil with igniter circuit.

DESCRIPTION

A Direct Ignition System (DIS) is used on this vehicle.
The DIS is a 1-cylinder ignition system in which each cylinder is ignited by one ignition coil and one spark plug is connected to the end of each secondary wiring. High-voltage is generated in the secondary wiring and then applied directly to each spark plug. The sparks of the spark plugs pass from the center electrodes to the ground electrodes.
The ECM determines the ignition timing and transmits the ignition (IGT) signals to each cylinder. Using the IGT signal, the ECM turns the power transistor inside the igniter on and off. The power transistor, in turn, switches on and off the current to the primary coil. When the current to the primary coil is cut off, high-voltage is generated in the secondary coil. This voltage is applied to the spark plugs, causing them to spark inside the cylinders. As the ECM cuts the current to the primary coil off, the igniter sends back an ignition confirmation (IGF) signal to the ECM, for each cylinder ignition.

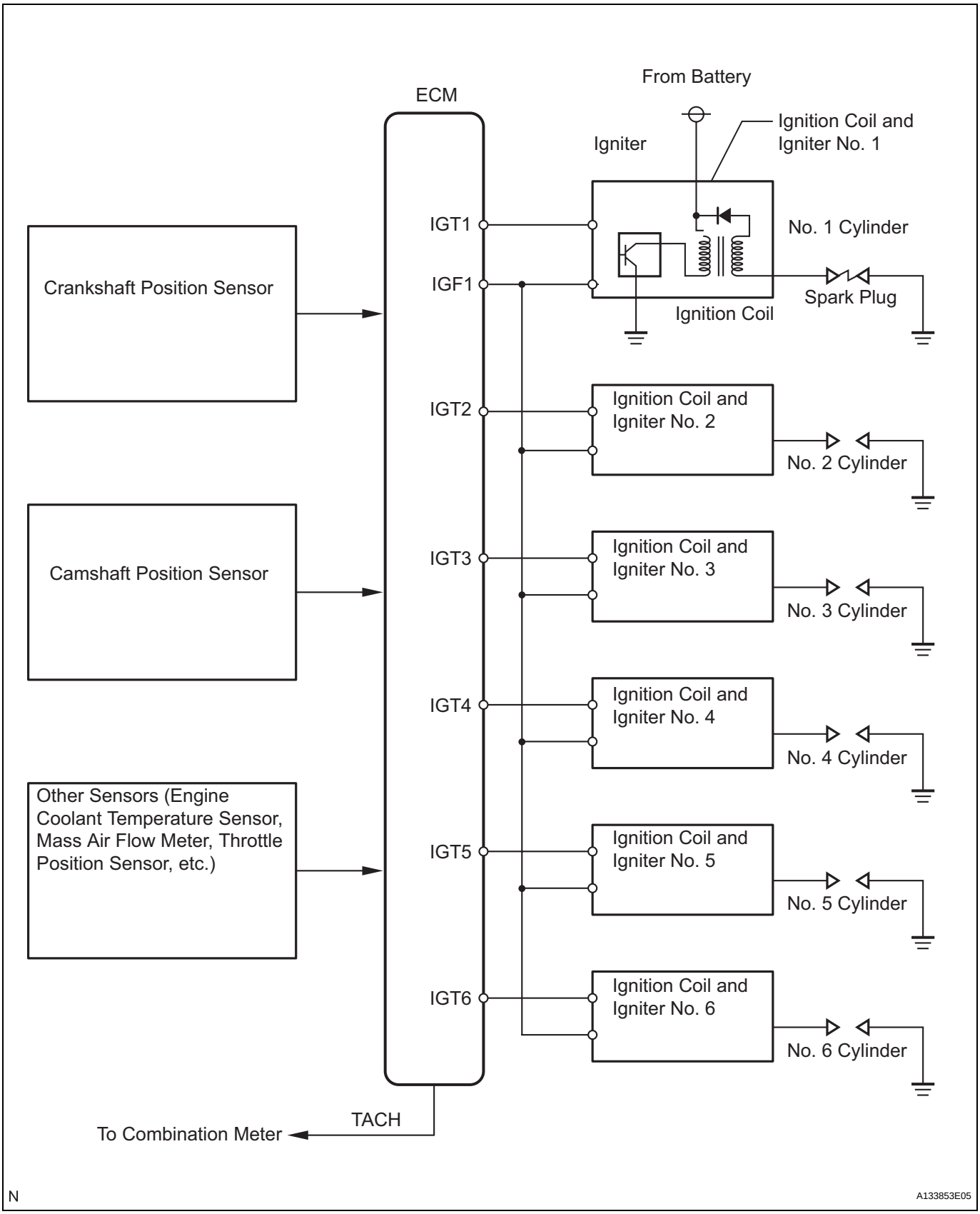
From Battery
ECM
Igniter
Ignition Coil and
Igniter No. 1
IGT1
IGF1
No. 1 Cylinder
Spark Plug
Ignition Coil
Crankshaft Position Sensor
IGT2
Ignition Coil and
Igniter No. 2
No. 2 Cylinder
Camshaft Position Sensor
IGT3
Ignition Coil and
Igniter No. 3
No. 3 Cylinder
IGT4
Ignition Coil and
Igniter No. 4
No. 4 Cylinder
Other Sensors (Engine
Coolant Temperature Sensor,
Mass Air Flow Meter, Throttle
Position Sensor, etc.)
IGT5
Ignition Coil and
Igniter No. 5
No. 5 Cylinder
IGT6
Ignition Coil and
Igniter No. 6
No. 6 Cylinder
TACH
To Combination Meter
N
A133853E05

DTC No.	DTC Detection Condition	Trouble Area
P0351 P0352 P0353 P0354 P0355 P0356	No IGF signal to ECM while engine is running (1 trip detection logic)	• Ignition system • Open or short in IGF1 or IGT circuit (1 to 6) between ignition coil with igniter and ECM • No. 1 to No. 6 ignition coils with igniters • ECM

Reference: Inspection using an oscilloscope

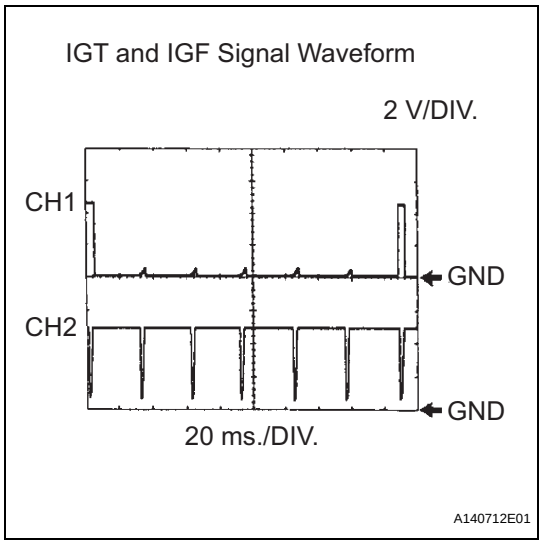

While cranking or idling, check the waveform between terminals IGT (1 to 6) and E1, and IGF1 and E1 of the ECM connector.

Item	Content
Terminals	CH1: IGT1, IGT2, IGT3, IGT4, IGT5, IGT6 - E1 CH2: IGF1 - E1
Equipment Settings	2 V/Division, 20 ms./Division
Conditions	Cranking or idling

MONITOR DESCRIPTION

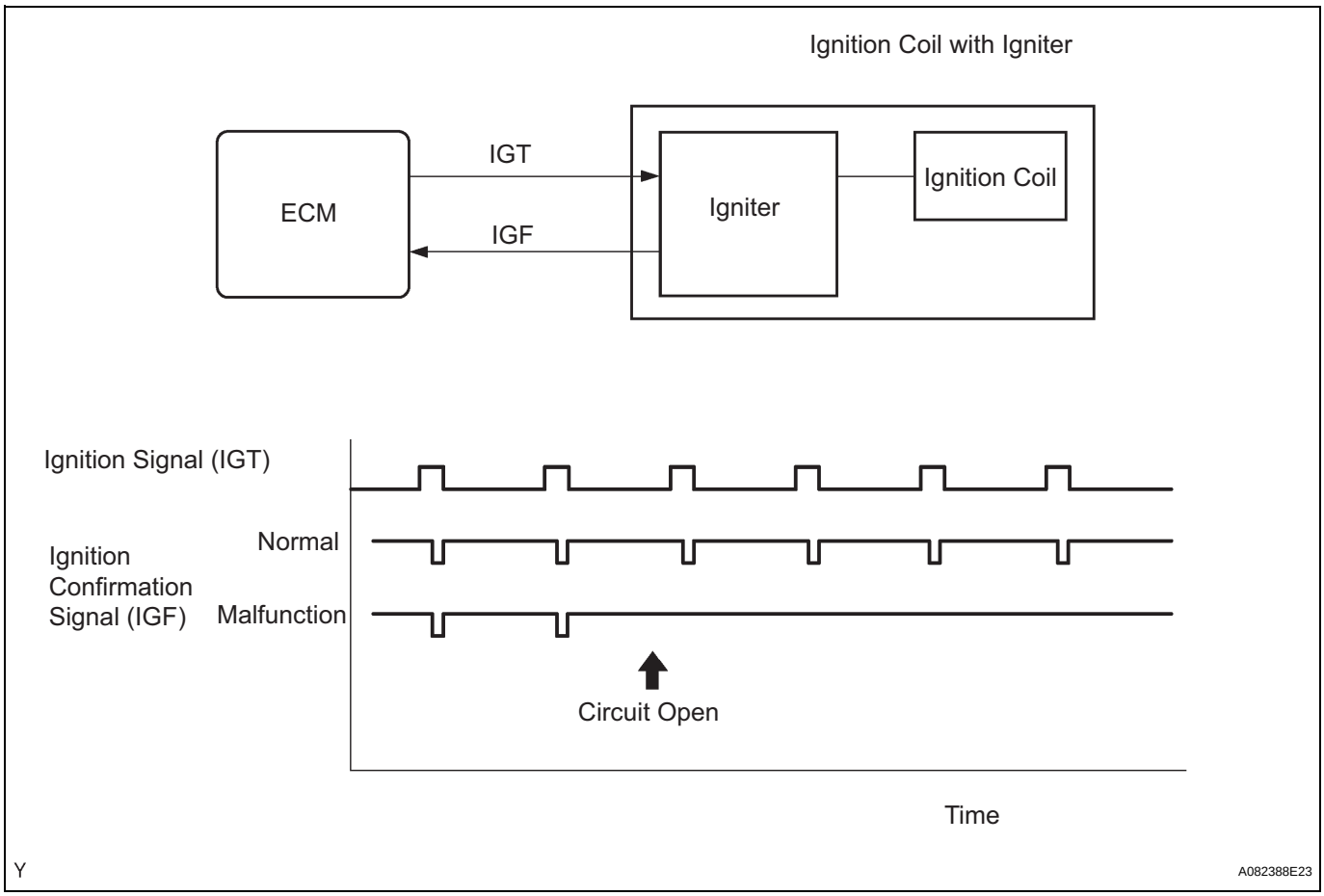

If the ECM does not receive any IGF signals despite transmitting the IGT signal, it interprets this as a fault in the igniter and sets a DTC.
If the malfunction is not repaired successfully, a DTC is set 1 second after the engine is next started.

MONITOR STRATEGY

Related DTCs	P0351: Igniter (Cylinder 1) malfunction P0352: Igniter (Cylinder 2) malfunction P0353: Igniter (Cylinder 3) malfunction P0354: Igniter (Cylinder 4) malfunction P0355: Igniter (Cylinder 5) malfunction P0356: Igniter (Cylinder 6) malfunction
Required Sensors / Components (Main)	Igniter (Cylinder 1 to 6)
Required Sensors / Components (Related)	Crankshaft position sensor
Frequency of Operation	Continuous
Duration	0.256 seconds and 5 sparks
MIL Operation	Immediate
Sequence of Operation	None

TYPICAL ENABLING CONDITIONS

The monitor will run whenever these DTCs are not present	None
Either of the following conditions met	Condition 1 or 2
1. All of the following conditions are met:	Condition (a) and (b)
(a) Engine RPM	500 rpm or less
(b) Battery voltage	6 V or more

2. All of the following conditions are met:	Condition (c) and (d)
(c) Engine RPM	More than 500 rpm
(d) Battery voltage	10 V or more

TYPICAL MALFUNCTION THRESHOLDS

Ignition signal fail count	More than 2 times
Ignition signal fail count is on the right	No ignition confirmation signal from igniter.

COMPONENT OPERATING RANGE

IGF signal	Igniter transmits IGF signal when it receives IGT signal from ECM

WIRING DIAGRAM

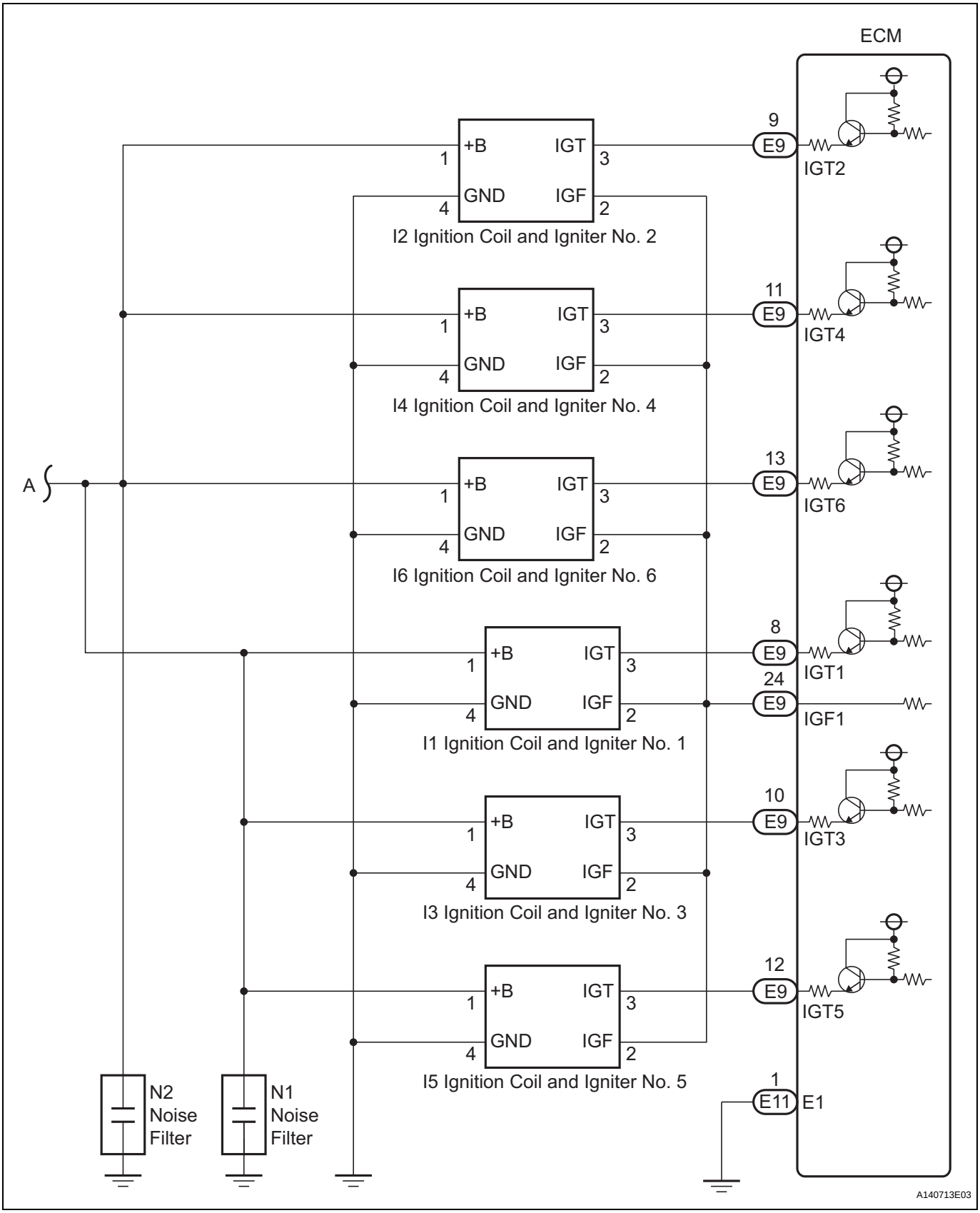

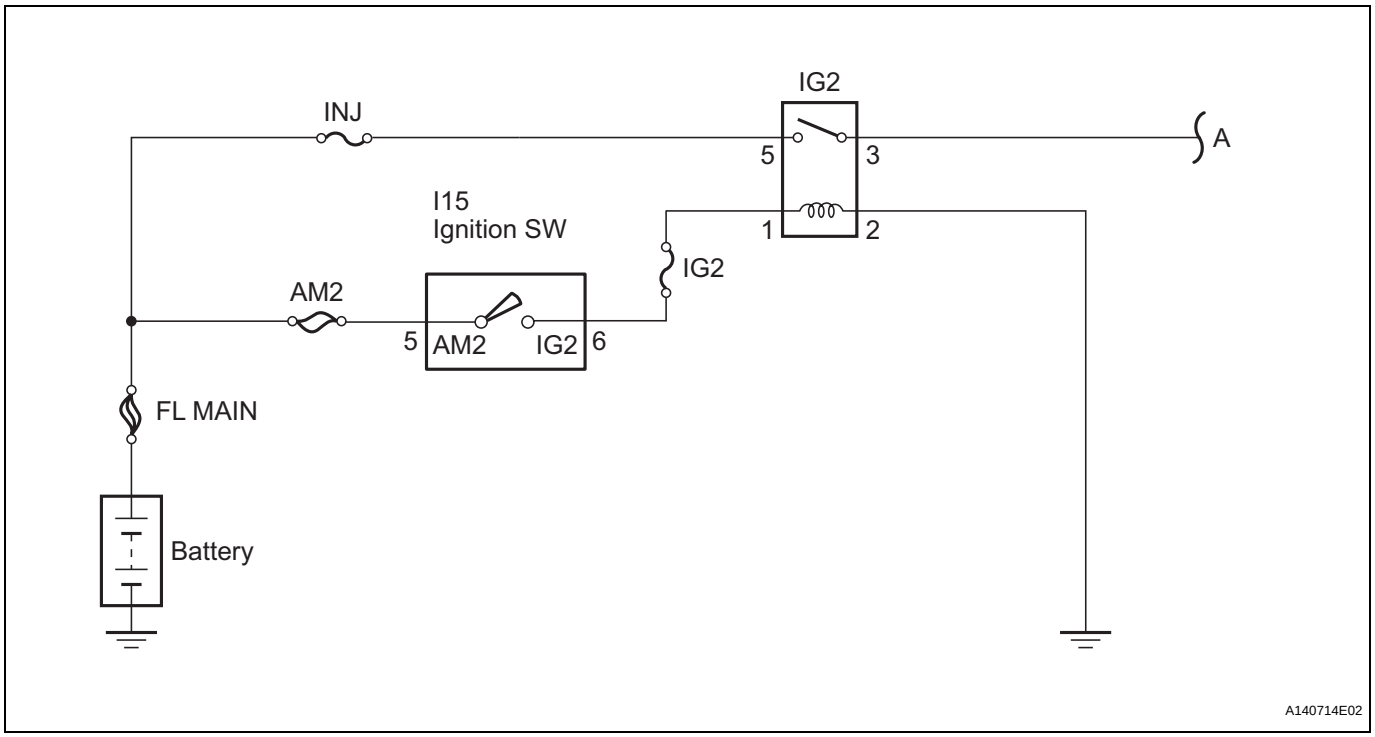

INSPECTION PROCEDURE

HINT:
Read freeze frame data using the intelligent tester. The ECM records vehicle and driving condition information as freeze frame data the moment a DTC is stored. When troubleshooting, freeze frame data can be helpful in determining whether the vehicle was running or stopped, whether the engine was warmed up or not, whether the air-fuel ratio was lean or rich, as well as other data recorded at the time of a malfunction.

1	CHECK FOR SPARKS AND CHECK SPARK PLUG OF MISFIRING CYLINDER

HINT:
(See page ES-211)

NG → **Go to step 4**

OK

2	CHECK HARNESS AND CONNECTOR (IGNITION COIL ASSEMBLY - ECM (IGF1 SIGNAL TERMINAL))

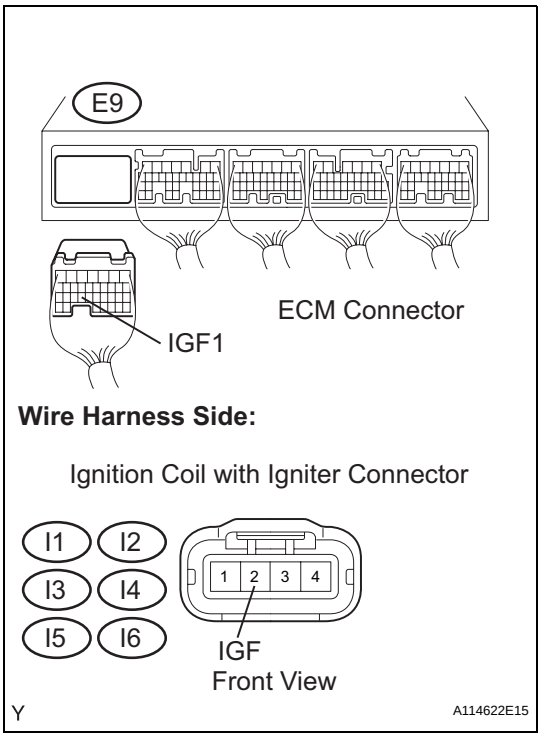

(a) Disconnect the I1, I2, I3, I4, I5 or I6 ignition coil with igniter connector.
(b) Disconnect the E9 ECM connector.
(c) Measure the resistance according to the value(s) in the table below.

Standard resistance:

Check for open

Tester Connection	Specified Condition
IGF (I1-2) - IGF1 (E9-24)	Below 1 Ω
IGF (I2-2) - IGF1 (E9-24)	Below 1 Ω
IGF (I3-2) - IGF1 (E9-24)	Below 1 Ω
IGF (I4-2) - IGF1 (E9-24)	Below 1 Ω
IGF (I5-2) - IGF1 (E9-24)	Below 1 Ω
IGF (I6-2) - IGF1 (E9-24)	Below 1 Ω

Check for short

Tester Connection	Specified Condition
IGF (I1-2) or IGF1 (E9-24) - Body ground	10 kΩ or higher
IGF (I2-2) or IGF1 (E9-24) - Body ground	10 kΩ or higher
IGF (I3-2) or IGF1 (E9-24) - Body ground	10 kΩ or higher
IGF (I4-2) or IGF1 (E9-24) - Body ground	10 kΩ or higher
IGF (I5-2) or IGF1 (E9-24) - Body ground	10 kΩ or higher
IGF (I6-2) or IGF1 (E9-24) - Body ground	10 kΩ or higher

(d) Reconnect the ECM connector.
(e) Reconnect the ignition coil with igniter connector.

NG → **REPAIR OR REPLACE HARNESS OR CONNECTOR (IGNITION COIL ASSEMBLY - ECM)**

OK

3	INSPECT ECM (IGF1 VOLTAGE)

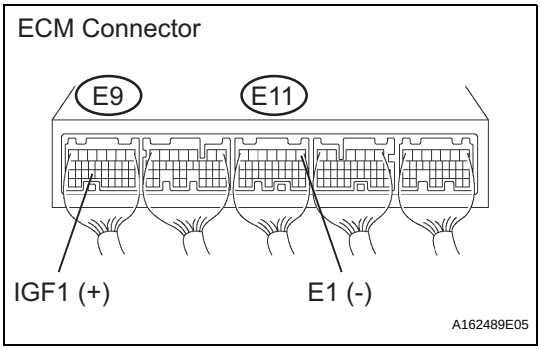

(a) Disconnect the I1, I2, I3, I4, I5 or I6 ignition coil with igniter connector.
(b) Turn the ignition switch to the ON position.
(c) Measure the voltage according to the value(s) in the table below.

Standard voltage

Tester Connection	Specified Condition
IGF1 (E9-24) - E1 (E11-1)	4.5 to 5.5 V

(d) Reconnect the ignition coil connector.

NG → **REPLACE ECM (See page ES-498)**

OK

REPLACE IGNITION COIL ASSEMBLY (See page IG-8)

4 CHECK HARNESS AND CONNECTOR (IGNITION COIL ASSEMBLY - ECM (IGT SIGNAL TERMINAL))

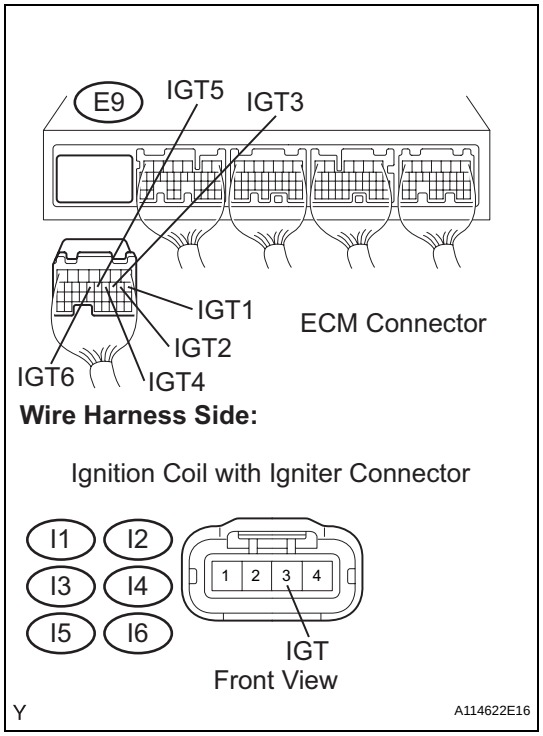

(a) Disconnect the I1, I2, I3, I4, I5 or I6 ignition coil with igniter connector.
(b) Disconnect the E9 ECM connector.
(c) Measure the resistance according to the value(s) in the table below.

Standard resistance :

Check for open

Tester Connection	Specified Condition
IGT (I1-3) - IGT1 (E9-8)	Below 1 Ω
IGT (I2-3) - IGT2 (E9-9)	Below 1 Ω
IGT (I3-3) - IGT3 (E9-10)	Below 1 Ω
IGT (I4-3) - IGT4 (E9-11)	Below 1 Ω
IGT (I5-3) - IGT5 (E9-12)	Below 1 Ω
IGT (I6-3) - IGT6 (E9-13)	Below 1 Ω

Check for short

Tester Connection	Specified Condition
IGT (I1-3) or IGT1 (E9-8) - Body ground	10 kΩ or higher
IGT (I2-3) or IGT2 (E9-9) - Body ground	10 kΩ or higher
IGT (I3-3) or IGT3 (E9-10) - Body ground	10 kΩ or higher
IGT (I4-3) or IGT4 (E9-11) - Body ground	10 kΩ or higher
IGT (I5-3) or IGT5 (E9-12) - Body ground	10 kΩ or higher
IGT (I6-3) or IGT6 (E9-13) - Body ground	10 kΩ or higher

NG → **REPAIR OR REPLACE HARNESS OR CONNECTOR (IGNITION COIL ASSEMBLY - ECM)**

OK

5 INSPECT ECM (IGT1, IGT2, IGT3, IGT4, IGT5 OR IGT6 VOLTAGE)

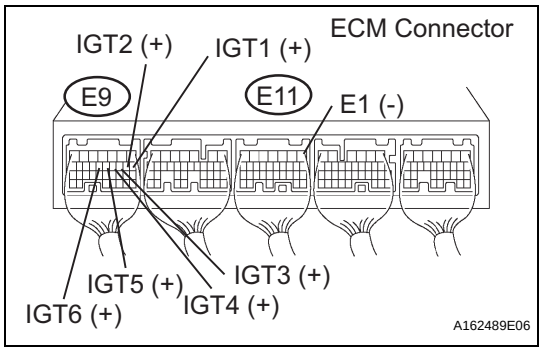

(a) Turn the ignition switch to the ON position.
(b) Measure the voltage according to the value(s) in the table below.

Standard voltage

Tester Connection	Specified Condition
IGT1 (E9-8) - E1 (E11-1)	0.1 to 4.5 V
IGT2 (E9-9) - E1 (E11-1)	0.1 to 4.5 V
IGT3 (E9-10) - E1 (E11-1)	0.1 to 4.5 V
IGT4 (E9-11) - E1 (E11-1)	0.1 to 4.5 V
IGT5 (E9-12) - E1 (E11-1)	0.1 to 4.5 V

Tester Connection	Specified Condition
IGT6 (E9-13) - E1 (E11-1)	0.1 to 4.5 V

NG → REPLACE ECM (See page ES-498)

OK

6 INSPECT ECM (IGT1, IGT2, IGT3, IGT4, IGT5 OR IGT6 VOLTAGE)

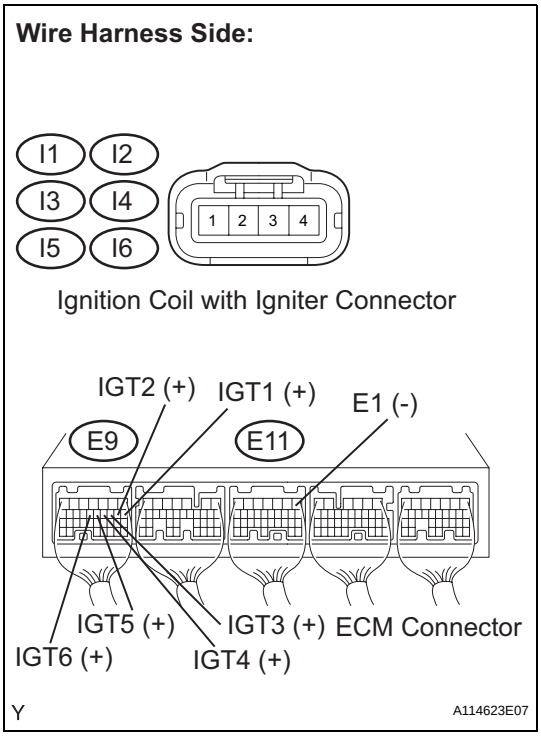

(a) Disconnect the I1, I2, I3, I4, I5 or I6 ignition coil connector.
(b) Turn the ignition switch to the ON position.
(c) Measure the voltage according to the value(s) in the table below.

Standard voltage

Tester Connection	Specified Condition
IGT1 (E9-8) - E1 (E11-1)	4.5 V or more
IGT2 (E9-9) - E1 (E11-1)	4.5 V or more
IGT3 (E9-10) - E1 (E11-1)	4.5 V or more
IGT4 (E9-11) - E1 (E11-1)	4.5 V or more
IGT5 (E9-12) - E1 (E11-1)	4.5 V or more
IGT6 (E9-13) - E1 (E11-1)	4.5 V or more

(d) Reconnect the ignition coil connector.

NG → REPLACE ECM (See page ES-498)

OK

7 INSPECT IGNITION COIL ASSEMBLY (POWER SOURCE)

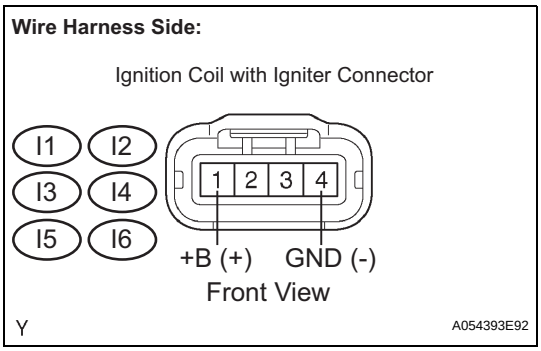

(a) Disconnect the I1, I2, I3, I4, I5 or I6 ignition coil with igniter connector.
(b) Measure the resistance according to the value(s) in the table below.

Standard resistance:
Check for open

Tester Connection	Specified Condition
GND (I1-4) - Body ground	Below 1 Ω
GND (I2-4) - Body ground	Below 1 Ω
GND (I3-4) - Body ground	Below 1 Ω
GND (I4-4) - Body ground	Below 1 Ω
GND (I5-4) - Body ground	Below 1 Ω
GND (I6-4) - Body ground	Below 1 Ω

(c) Turn the ignition switch to the ON position.
(d) Measure the voltage according to the value(s) in the table below.

Standard voltage

Tester Connection	Specified Condition
+B (I1-1) - GND (I1-4)	9 to 14 V
+B (I2-1) - GND (I2-4)	9 to 14 V
+B (I3-1) - GND (I3-4)	9 to 14 V
+B (I4-1) - GND (I4-4)	9 to 14 V
+B (I5-1) - GND (I5-4)	9 to 14 V
+B (I6-1) - GND (I6-4)	9 to 14 V

(e) Reconnect the ignition coil with igniter connector.

NG → **Go to step 8**

OK

ES

REPLACE IGNITION COIL ASSEMBLY (See page IG-8)

8 INSPECT RELAY (IG2 RELAY)

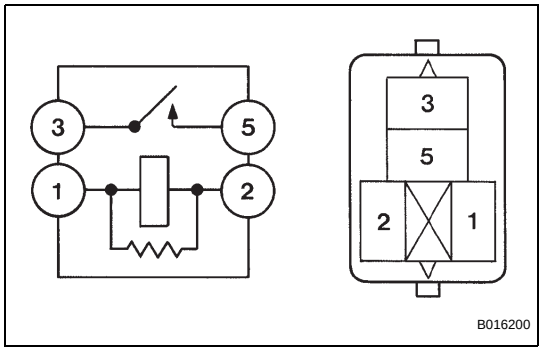

(a) Remove the IG2 relay from the No. 3 engine room R/B.
(b) Measure the resistance according to the value(s) in the table below.

Standard resistance

Tester Connection	Specified Condition
3 - 5	10 kΩ or higher
3 - 5	Bellow 1 Ω (when battery voltage applied to terminals 1 and 2)

(c) Reinstall the IG2 relay.

NG → **REPLACE RELAY (IG2 RELAY)**

OK

REPAIR OR REPLACE HARNESS OR CONNECTOR (IGNITION COIL ASSEMBLY - IGNITION SWITCH)