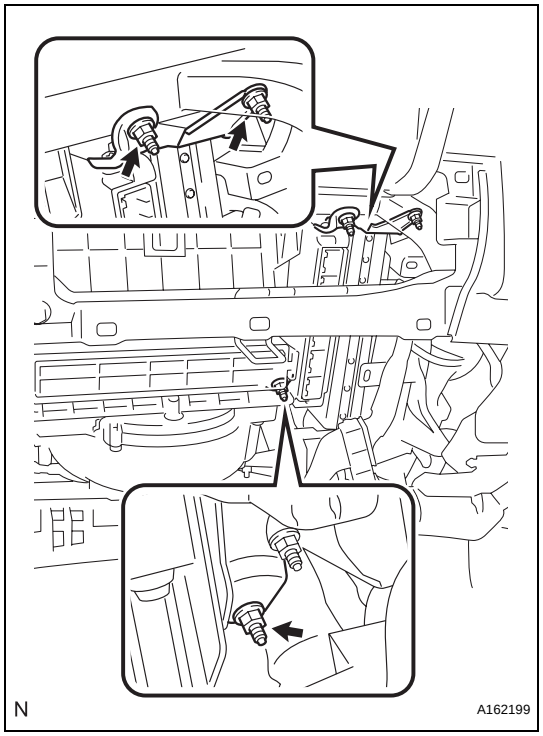

4. REMOVE ECM (with 10 speakers system)

(a) Disconnect the 5 ECM connectors and 2 stereo components amplifier connectors.

(b) Remove the 4 nuts and the ECM with the stereo components amplifier.

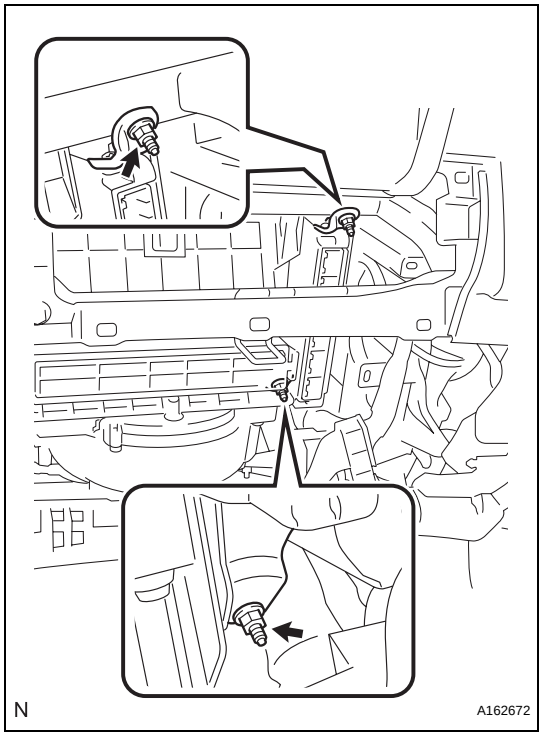

INSTALLATION

1. INSTALL ECM

(a) Install the ECM with the 2 nuts.
Torque: 5.5 N*m (56 kgf*cm, 49 in.*lbf)

(b) Connect the 5 ECM connectors.

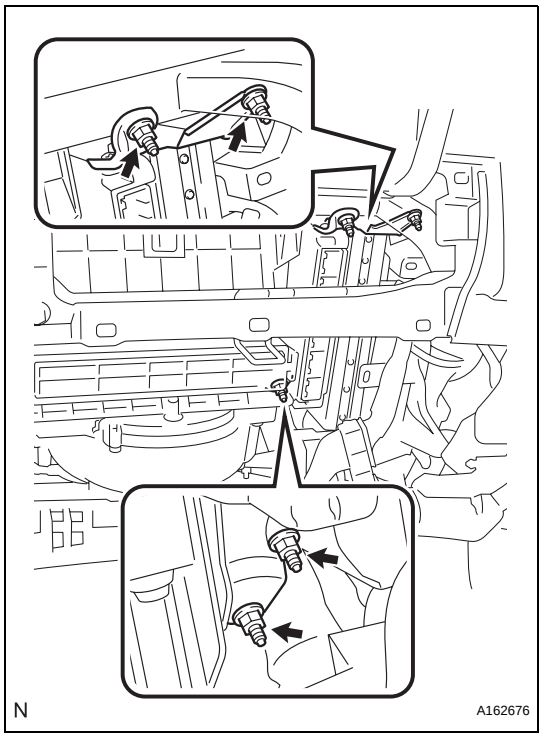

2. INSTALL ECM (with 10 speakers system)

(a) Install the ECM and stereo components amplifier with the 4 nuts.
Torque: 5.5 N*m (56 kgf*cm, 49 in.*lbf)

(b) Connect the 5 ECM connectors and 2 stereo components amplifier connectors.

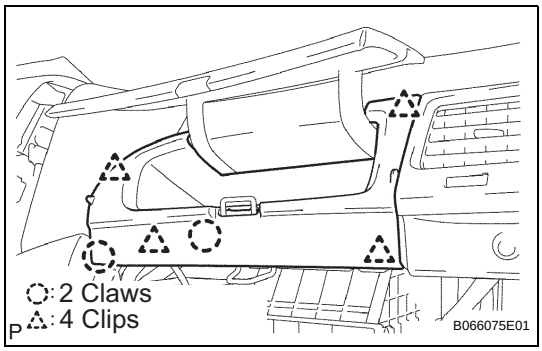

3. INSTALL NO. 2 INSTRUMENT PANEL BOX

(a) Install the No. 2 instrument panel box.

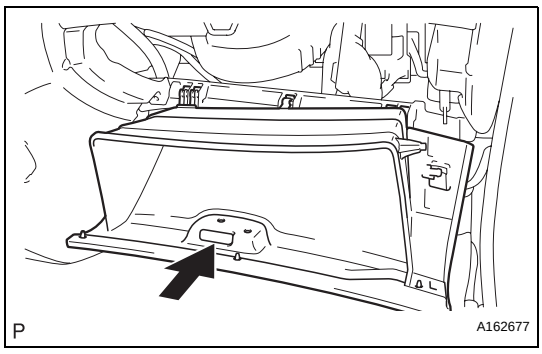

4. INSTALL GLOVE COMPARTMENT DOOR ASSEMBLY

(a) Install the glove compartment door sub-assembly frontward to install it.

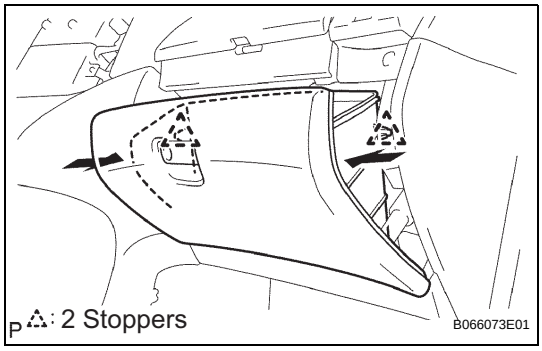

(b) Push the right side wall and then push the left wall to install the stoppers.

5. PERFORM REGISTRATION

(a) When replacing the ECM, perform distance control ECU recognition in ECM (See page CC-125).