ACCELERATOR PEDAL ROD

COMPONENTS

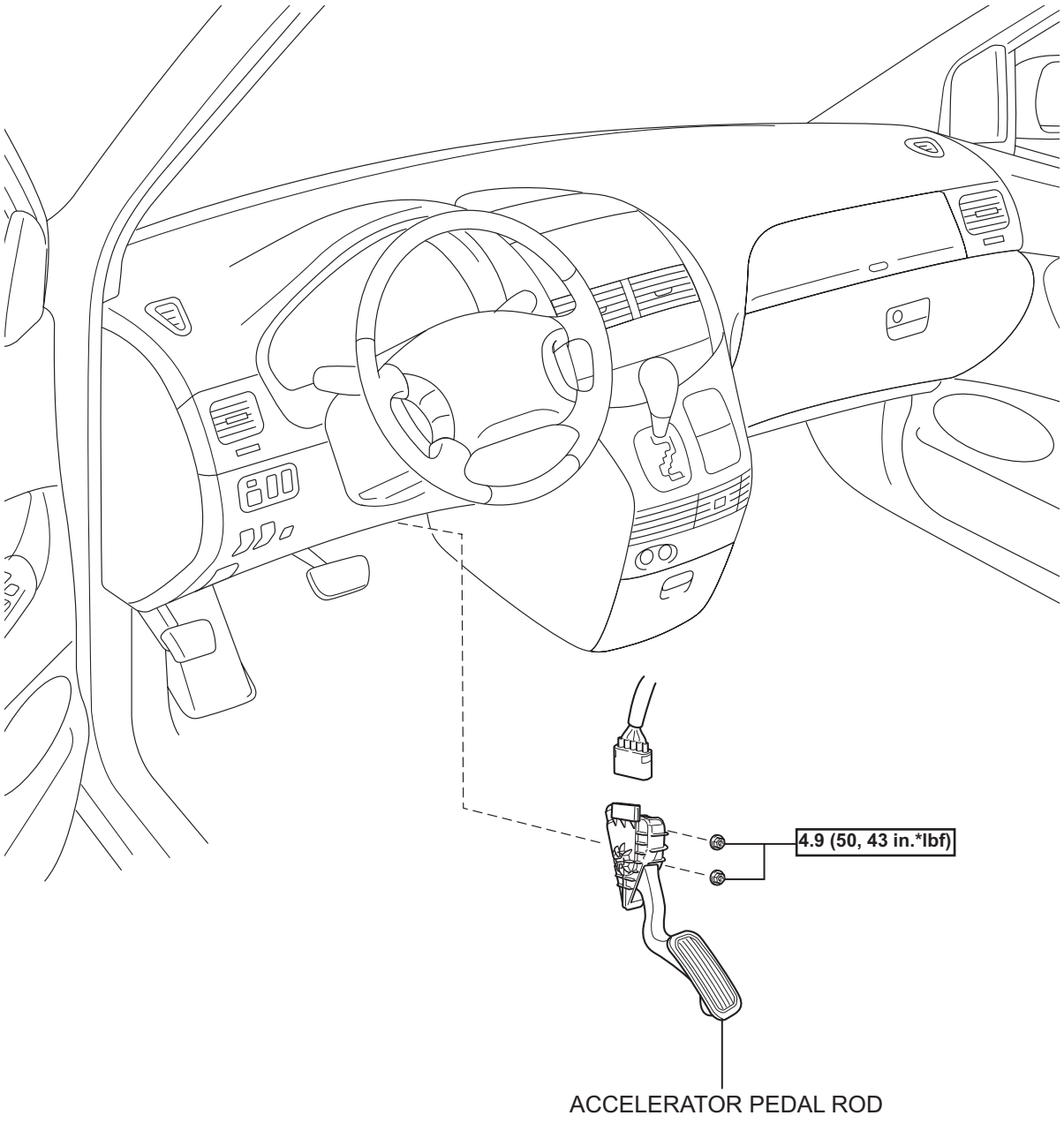

N*m (kgf*cm, ft.*lbf): Specified torque

N

A162200E01

ES

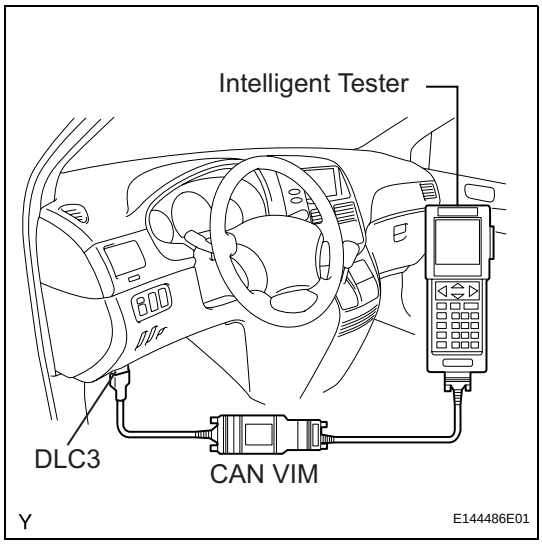

ON-VEHICLE INSPECTION

1. CHECK ACCELERATOR PEDAL ROD

(a) Check the voltage.

(1) Connect the intelligent tester to the DLC3.

(2) Turn the ignition switch to the ON position.

(3) Turn the intelligent tester on.

(4) Select the menu items: DIAGNOSIS / ENHANCED OBD II / DATA LIST / ALL / ACCEL POS #1, ACCEL POS #2.

(5) Operate the accelerator pedal, and then check that the ACCEL POS #1 and ACCEL POS #2 values are within the specifications.

Standard voltage (ACCEL POS #1)

Accelerator Pedal Condition	Specified Condition
Released	0.5 to 1.1 V
Depressed	2.5 to 4.5 V

Standard voltage (ACCEL POS #2)

Accelerator Pedal Condition	Specified Condition
Released	1.2 to 2.0 V
Depressed	3.4 to 5.0 V

If the result is not as specified, check the accelerator pedal rod, wire harness or ECM.

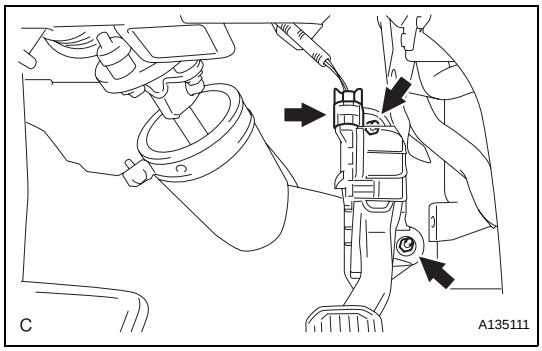

REMOVAL

1. REMOVE ACCELERATOR PEDAL ROD

(a) Disconnect the accelerator pedal position sensor connector.

(b) Remove the 2 nuts and accelerator pedal rod.