DTC	P2195	Oxygen (A/F) Sensor Signal Stuck Lean (Bank 1 Sensor 1)
DTC	P2196	Oxygen (A/F) Sensor Signal Stuck Rich (Bank 1 Sensor 1)
DTC	P2197	Oxygen (A/F) Sensor Signal Stuck Lean (Bank 2 Sensor 1)
DTC	P2198	Oxygen (A/F) Sensor Signal Stuck Rich (Bank 2 Sensor 1)

ES

HINT:
- Although the DTC titles say oxygen sensor, these DTCs relate to the Air-Fuel Ratio (A/F) sensor.
- Sensor 1 refers to the sensor mounted in front of the Three-Way Catalytic Converter (TWC) and located near the engine assembly.

DESCRIPTION

The A/F sensor generates a voltage* that corresponds to the actual air-fuel ratio. This sensor voltage is used to provide the ECM with feedback so that it can control the air-fuel ratio. The ECM determines the deviation from the stoichiometric air-fuel ratio level, and regulates the fuel injection time. If the A/F sensor malfunctions, the ECM is unable to control the air-fuel ratio accurately.

The A/F sensor is the planar type and is integrated with the heater, which heats the solid electrolyte (zirconia element). This heater is controlled by the ECM. When the intake air volume is low (the exhaust gas temperature is low), a current flows into the heater to heat the sensor, in order to facilitate accurate oxygen concentration detection. In addition, the sensor and heater portions are narrower than the conventional type. The heat generated by the heater is conducted to the solid electrolyte through the alumina, therefore the sensor activation is accelerated.

A three-way catalytic converter (TWC) is used in order to convert the carbon monoxide (CO), hydro carbon (HC), and nitrogen oxides (HOx) into less harmful substances. To allow the TWC to function effectively, it is necessary to keep the air-fuel ratio of the engine near the stoichiometric air-fuel ratio.

*: Value changes inside the ECM. Since the A/F sensor is the current output element, a current is converted to a voltage inside the ECM. Any measurements taken at the A/F sensor or ECM connectors will show a constant voltage.

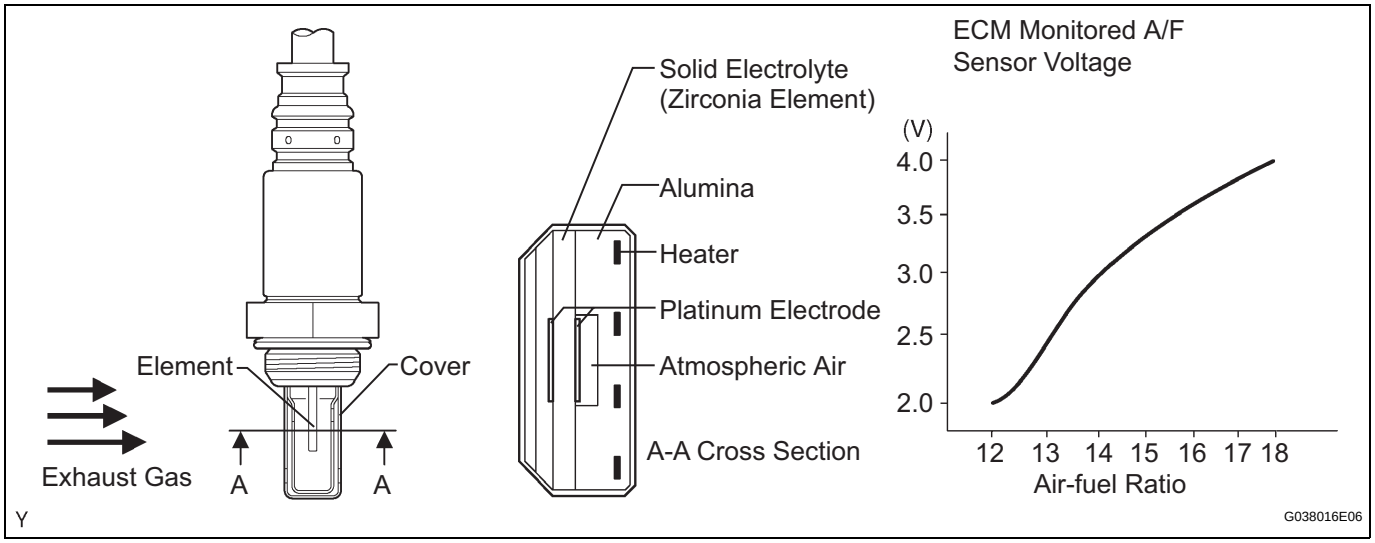

DTC No.	DTC Detection Condition	Trouble Area
P2195 P2197	Conditions (a) and (b) continue for 2 seconds or more (2 trip detection logic): (a) Air-Fuel Ratio (A/F) sensor voltage is more than 3.8 V (b) Heated Oxygen (HO2) sensor voltage is 0.15 V or more	• Open or short in A/F sensor (bank 1, 2 sensor 1) circuit • A/F sensor (bank 1, 2 sensor 1) • A/F sensor (bank 1, 2 sensor 1) heater • A/F sensor heater relay • A/F sensor heater and relay circuits • Intake system • Fuel pressure • Injector • ECM
P2195 P2197	While fuel-cut operation is performed (during vehicle deceleration), air-furl ratio (A/F) sensor current is 3.6 mA or more for 3 seconds (2 trip detection logic)	• A/F sensor • ECM
P2196 P2198	Conditions (a) and (b) continue for 2 seconds or more (2 trip detection logic): (a) A/F sensor voltage is less than 2.8 V (b) HO2 sensor voltage is less than 0.6 V	• Open or short in A/F sensor (bank 1, 2 sensor 1) circuit • A/F sensor (bank 1, 2 sensor 1) • A/F sensor (bank 1, 2 sensor 1) heater • A/F sensor heater relay • A/F sensor heater and relay circuits • Intake system • Fuel pressure • Injector • ECM
P2196 P2198	While fuel-cut operation is performed (during vehicle deceleration), air-furl ratio (A/F) sensor current is less than 1.4 mA for 3 seconds (2 trip detection logic)	• A/F sensor • ECM

ES

HINT:
- DTCs P2195 and P2196 indicate malfunctions related to the bank 1 A/F sensor circuit.
- DTCs P2197 and P2198 indicate malfunctions related to the bank 2 A/F sensor circuit.
- Bank 1 refers to the bank that includes cylinder No. 1.
- Bank 2 refers to the bank that includes cylinder No. 2.
- When any of these DTCs are set, check the A/F sensor voltage output by selecting the following menu items on the intelligent tester: DIAGNOSIS / ENHANCED OBDII / DATA LIST / PRIMARY / AFS B1S1.
- Short-term fuel trim values can also be read using the intelligent tester.
- The ECM regulates the voltages at the A1A+, A2A+, A1A- and A2A- terminals of the ECM to a constant level. Therefore, the A/F sensor voltage output cannot be confirmed without using the intelligent tester.
- If an A/F sensor malfunction is detected, the ECM sets a DTC.

MONITOR DESCRIPTION

Sensor voltage detection monitor

Under the air-fuel ratio feedback control, if the A/F sensor voltage output indicates rich or lean for a certain period of time, the ECM determines that there is a malfunction in the A/F sensor. The ECM illuminates the MIL and sets a DTC.

Example:

If the A/F sensor voltage output is less than 2.8 V (very rich condition) for 10 seconds, despite the HO2 sensor voltage output being less than 0.6 V, the ECM sets DTC P2196. Alternatively, if the A/F sensor voltage output is more than 3.8 V (very lean condition) for 10 seconds, despite the HO2 sensor voltage output being 0.15 V or more, DTC P2195 is set.

Sensor current detection monitor

A rich air-fuel mixture causes a low A/F sensor current, and a lean air-fuel mixture causes a high A/F sensor current. Therefore, the sensor output becomes low during acceleration, and it becomes high during deceleration with the throttle valve fully closed. The ECM monitors the A/F sensor current during fuel-cut and detects any abnormal current values.

If the A/F sensor output is 3.6 mA or more for more than 3 seconds of cumulative time, the ECM interprets this as a malfunction in the A/F sensor and sets DTC P2195 (high-side stuck). If the A/F sensor output is 1.0 mA or less for more than 3 seconds of cumulative time, the ECM sets DTC P2196 (low-side stuck).

Air-fuel Ratio Sensor Current Monitor: Cumulative Time “t” = t1 + t2 = 3 seconds or more

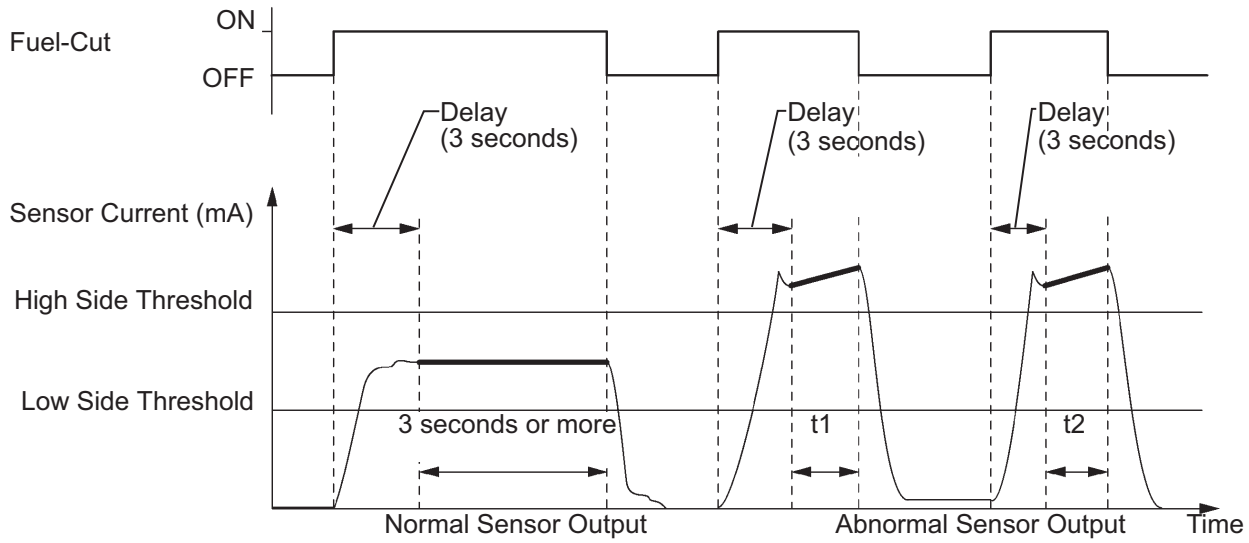

MONITOR STRATEGY

Related DTCs	P2195: A/F sensor (Bank 1) signal stuck lean P2196: A/F sensor (Bank 1) signal stuck rich P2197: A/F sensor (Bank 2) signal stuck lean P2198: A/F sensor (Bank 2) signal stuck rich
Required Sensors / Components (Main)	A/F sensor
Required Sensors / Components (Related)	HO2 sensor
Frequency of Operation	Continuous
Duration	Sensor voltage detection monitor: 10 seconds Sensor current detection monitor: 3 seconds
MIL Operation	2 driving cycles
Sequence of Operation	None

TYPICAL ENABLING CONDITIONS

All:

The monitor will run whenever these DTCs are not present	P0031, P0032, P0051, P0052 (A/F Sensor heater Sensor 1), P0037, P0038, P0057 P0058 (O2 Sensor heater Sensor 2), P0100, P0101, P0102, P0103 (MAF Sensor), P0110, P0112, P0113 (IAT Sensor), P0115, P0116, P0117, P0118 (ECT Sensor), P0120, P0121, P0122, P0220, P0222, P0223 (TP Sensor), P0125 (Insufficient ECT for Closed Loop), P0136, P0156 (O2 Sensor 2), P0171, P0172 (Fuel System), P0300, P0301, P0302, P0303, P0304, P0305, P0306 (Misfire), P0335 (CKP Sensor), P0340 (CMP Sensor), P0450, P0451, P0452, P0453, P0455, P0456 (EVAP System), P0500 (VSS)

Sensor voltage detection monitor (Lean side malfunction P2195, P2197):

Duration while all of the following conditions are met	2 seconds or more
Rear HO2 sensor voltage	0.15 V or more
Time after engine start	30 seconds or more
A/F sensor status	Activated
Fuel system status	Closed-loop
Engine	Running

Sensor voltage detection monitor (Rich side malfunction P2196, P2198):

Duration while all of the following conditions are met	2 seconds or more
Rear HO2 sensor voltage	Less than 0.6 V
Time after engine start	30 seconds or more
A/F sensor status	Activated
Fuel system status	Closed-loop
Engine	Running

Sensor Current detection monitor P2195, P2196, P2197, P2198

Battery voltage	11 V or more
Atmospheric pressure	0.75 or more
Air-fuel ratio sensor status	Activated
Engine coolant temperature	75°C (167°F) or more
Continuous time of fuel-cut	3 to 10 seconds

TYPICAL MALFUNCTION THRESHOLDS

Sensor voltage detection monitor (Lean side malfunction P2195, P2197):

A/F sensor voltage	More than 3.8 V

Sensor voltage detection monitor (Rich side malfunction P2196, P2198):

A/F sensor voltage	Less than 2.8 V

Sensor current detection monitor (High side malfunction P2195, P2197):

Air-fuel ratio sensor current during fuel cut	3.6 mA or more

Sensor current detection monitor (Rich side malfunction P2196, P2198):

Air-fuel ratio sensor current during fuel cut	Less than 1.4 mA

MONITOR RESULT

Refer to CHECKING MONITOR STATUS (See page ES-19).

WIRING DIAGRAM

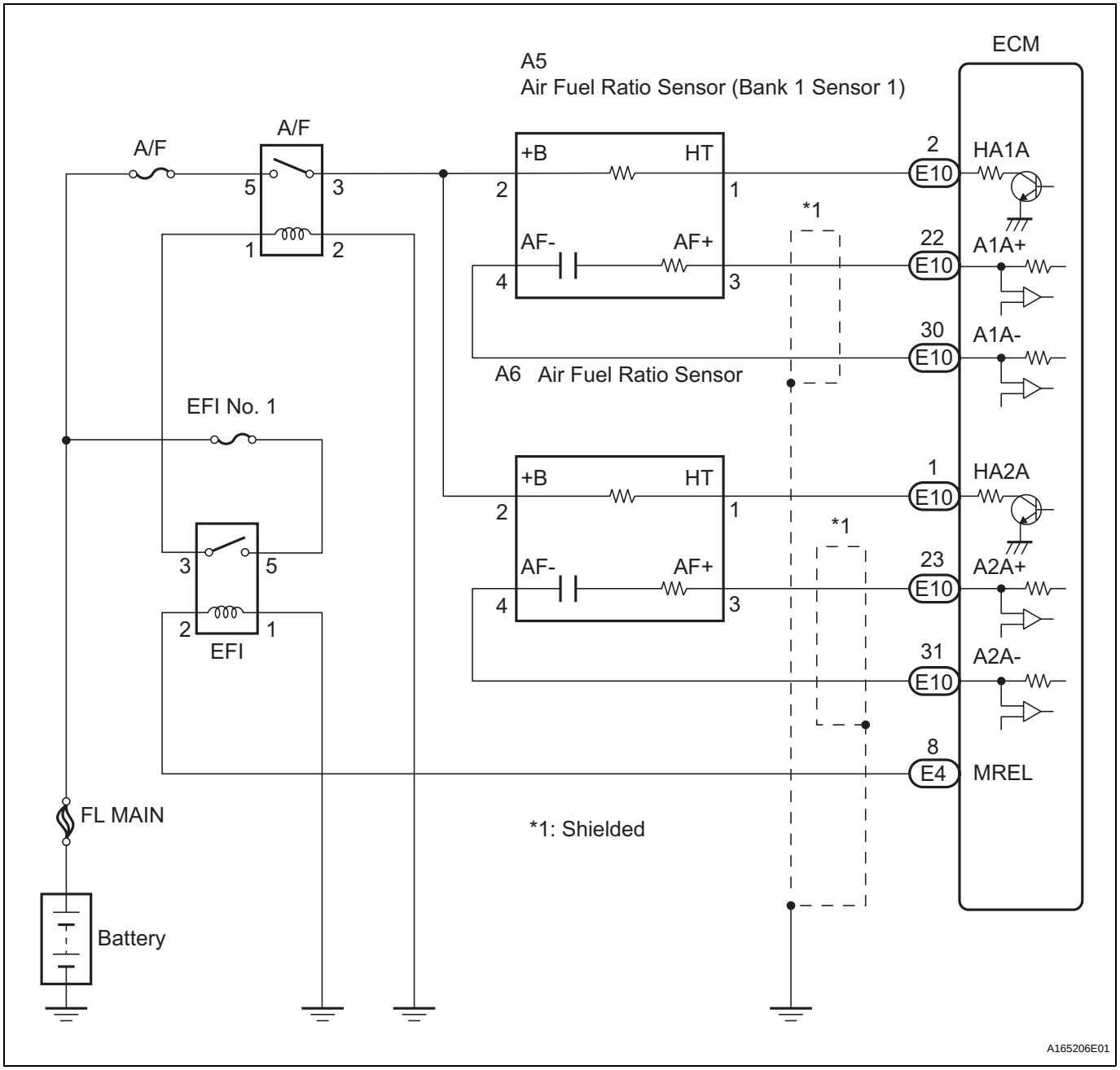

CONFIRMATION DRIVING PATTERN

This confirmation driving pattern is used in steps 4, 7, 17, and 21 of the following diagnostic troubleshooting procedure when using the intelligent tester.

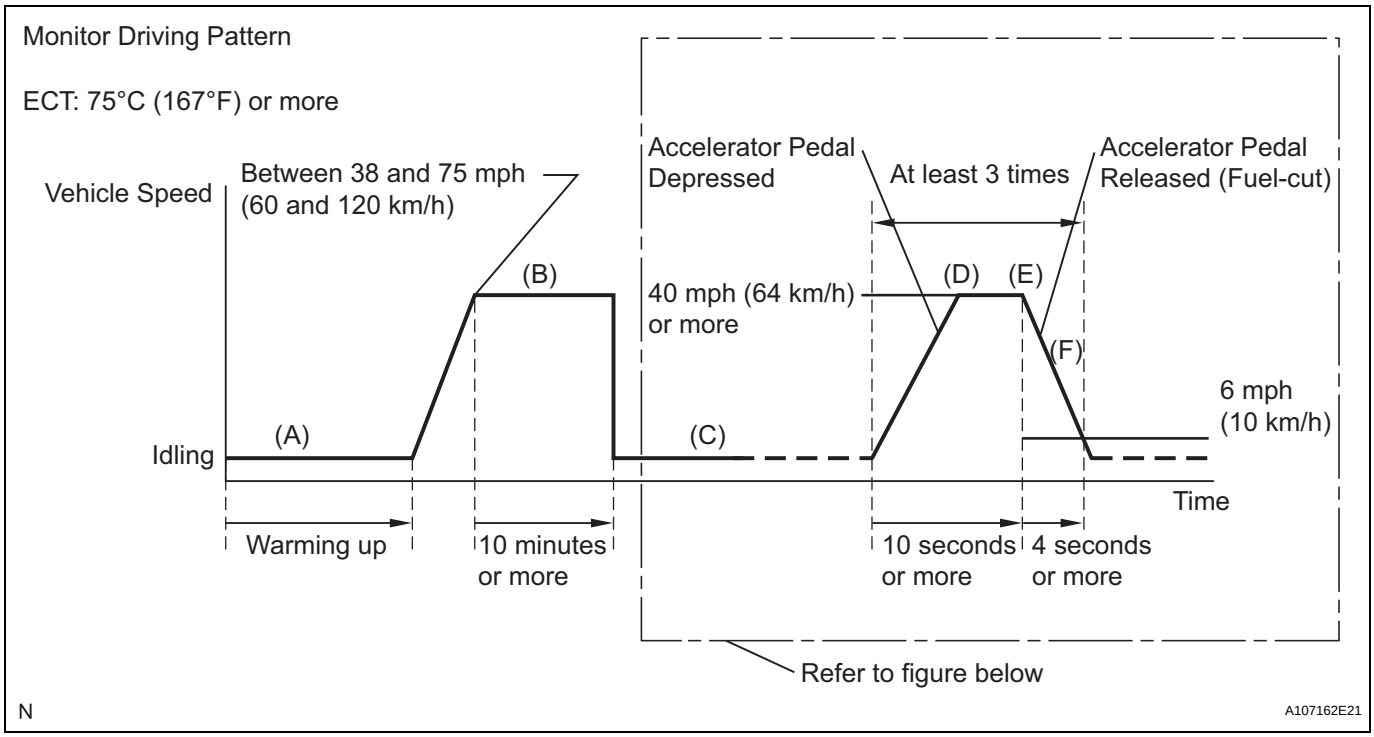

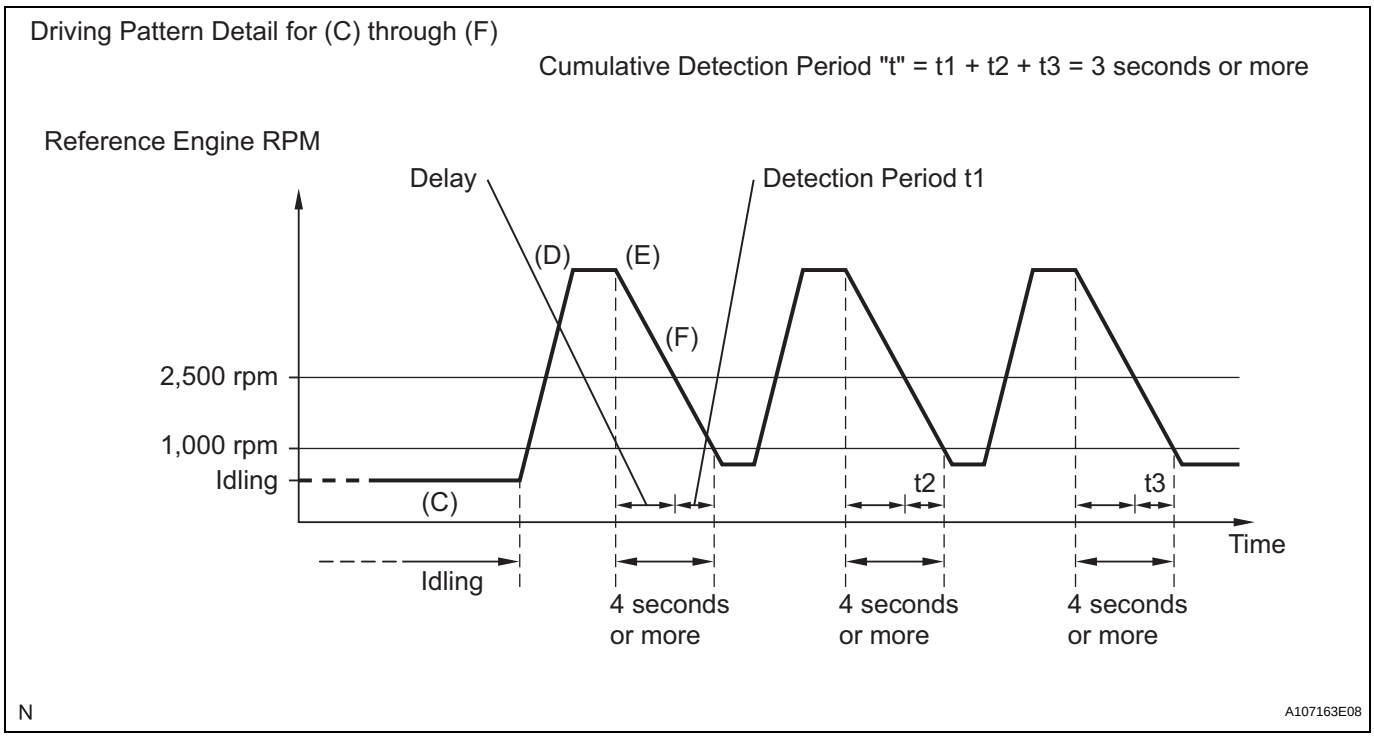

1. Connect the intelligent tester to the DLC3.
2. Turn the ignition switch to the ON position.
3. Turn the tester on.
4. Clear the DTCs (See page ES-39).
5. Start the engine, and warm it up until the ECT reaches 70°C (158°F) or higher (Procedure "A").
6. Select the following menu items on the tester to check the fuel-cut status: DIAGNOSIS / ENHANCED OBD II / DATA LIST / USER DATA / FC IDLE.
7. Drive the vehicle at between 38 mph (60 km/h) and 75 mph (120 km/h) for at least 10 minutes (Procedure "B").
8. Change the transmission to the 2nd gear (Procedure "C").

9. Drive the vehicle at a proper vehicle speed to perform fuel-cut operation (refer to the following HINT) (Procedure "D").
   HINT:
   Fuel-cut is performed when the following conditions are met:
   - Accelerator pedal is fully released.
   - Engine speed is 2500 rpm or more (fuel injection resumes at 1000 rpm).
10. Accelerate the vehicle to 40 mph (64 km/h) or more by depressing the accelerator pedal for at least 10 seconds (Procedure "E").
11. Soon after performing procedure "J" on the previous page, release the accelerator pedal for at least 4 seconds without depressing the brake pedal, in order to execute fuel-cut control (Procedure "F").
12. Allow the vehicle to decelerate until the vehicle speed declines to less than 6 mph (10 km/h).
13. Repeat procedures from "H" through "K" in this section at least 3 times per driving cycle.
    HINT:
    Completion of all A/F sensor monitors is required to change the value in TEST RESULT.
    CAUTION:
    Strictly observe posted speed limits, traffic laws, and road conditions when performing these driving patterns.

INSPECTION PROCEDURE

HINT:
Malfunctioning areas can be identified by performing the A/F CONTROL function provided in the ACTIVE TEST. The A/F CONTROL function can help to determine whether the Air-Fuel Ratio (A/F) sensor, Heated Oxygen (HO2) sensor and other potential trouble areas are malfunctioning.
The following instructions describe how to conduct the A/F CONTROL operation using an intelligent tester.

(a) Connect the intelligent tester to the DLC3.
(b) Start the engine and turn the tester on.
(c) Warm up the engine at an engine speed of 2500 rpm for approximately 90 seconds.
(d) Select the following menu items on the tester: DIAGNOSIS / ENHANCED OBD II / ACTIVE TEST / A/F CONTROL.
(e) Perform the A/F CONTROL operation with the engine in an idling condition (press the RIGHT or LEFT button to change the fuel injection volume).
(f) Monitor the voltage outputs of the A/F and HO2 sensors (AFS B1S1 and O2S B1S2 or AFS B2S1 and O2S B2S2) displayed on the tester.
   HINT:
   - The A/F CONTROL operation lowers the fuel injection volume by 12.5% or increases the injection volume by 25%.
   - Each sensor reacts in accordance with increases and decreases in the fuel injection volume.

Standard voltage

Tester Display (Sensor)	Injection Volumes	Status	Voltages
AFS B1S1 or AFS B2S1 (A/F)	+25%	Rich	Less than 3.0
AFS B1S1 or AFS B2S1 (A/F)	-12.5%	Lean	More than 3.35
O2S B1S2 or O2S B2S2 (HO2)	+25%	Rich	More than 0.55
O2S B1S2 or O2S B2S2 (HO2)	-12.5%	Lean	Less than 0.4

NOTICE:
The Air-Fuel Ratio (A/F) sensor has an output delay of a few seconds and the Heated Oxygen (HO2) sensor has a maximum output delay of approximately 20 seconds.

Case	A/F Sensor (Sensor 1) Output Voltage	HO2 Sensor (Sensor 2) Output Voltage	Main Suspected Trouble Area
1	**Injection Volume:** +25 % / -12.5 %  **Output Voltage:** More than 3.35 V / Less than 3.0 V  OK	**Injection Volume:** +25 % / -12.5 %  **Output Voltage:** More than 0.55 V / Less than 0.4 V  OK	-
2	**Injection Volume:** +25 % / -12.5 %  **Output Voltage:** Almost no reaction NG	**Injection Volume:** +25 % / -12.5 %  **Output Voltage:** More than 0.55 V / Less than 0.4 V  OK	• A/F sensor • A/F sensor heater • A/F sensor circuit
3	**Injection Volume:** +25 % / -12.5 %  **Output Voltage:** More than 3.35 V / Less than 3.0 V  OK	**Injection Volume:** +25 % / -12.5 %  **Output Voltage:** Almost no reaction NG	• HO2 sensor • HO2 sensor heater • HO2 sensor circuit
4	**Injection Volume:** +25 % / -12.5 %  **Output Voltage:** Almost no reaction NG	**Injection Volume:** +25 % / -12.5 %  **Output Voltage:** Almost no reaction NG	• Fuel pressure • Gas leakage from exhaust system (Air-fuel ratio extremely lean or rich)

– Following the A/F CONTROL procedure enables technicians to check and graph the voltage outputs of both the A/F and HO2 sensors.

– To display the graph, select the following menu items on the tester: DIAGNOSIS / ENHANCED OBD II / ACTIVE TEST / A/F CONTROL / USER DATA / AFS B1S1 and O2S B1S2 or AFS B2S1 and O2S B2S2. Press the YES button and then the ENTER button. Then press the F4 button.
HINT:
- Read freeze frame data using the intelligent tester. The ECM records vehicle and driving condition information as freeze frame data the moment a DTC is stored. When troubleshooting, freeze frame data can be helpful in determining whether the vehicle was running or stopped, whether the engine was warmed up or not, whether the air-fuel ratio was lean or rich, as well as other data recorded at the time of a malfunction.
- A low A/F sensor voltage could be caused by a rich air-fuel mixture. Check for conditions that would cause the engine to run rich.
- A high A/F sensor voltage could be caused by a lean air-fuel mixture. Check for conditions that would cause the engine to run lean.

1	CHECK ANY OTHER DTCS OUTPUT (IN ADDITION TO P2195, P2196, P2197 OR P2198)

(a) Connect the intelligent tester to the DLC3.
(b) Turn the ignition switch to the ON position.
(c) Turn the tester on.
(d) Select the following menu items: DIAGNOSIS / ENHANCED OBD II / DTC INFO / CURRENT CODES.
(e) Read the DTCs.

Result

Display (DTC Output)	Proceed to
P2195, P2196, P2197 or P2198	A
P2195, P2196, P2197 or P2198 and other DTCs	B

HINT:
If any DTCs other than P2195, P2196, P2197 or P2198 are output, troubleshoot those DTCs first.

B → DTC CAUSED BY RUNNING OUT OF FUEL

A

2	READ VALUE OF INTELLIGENT TESTER (TEST VALUE OF A/F SENSOR)

(a) Connect the intelligent tester to the DLC3.
(b) Turn the ignition switch to the ON position and turn the tester on.
(c) Clear the DTCs (See page ES-39).
(d) Allow the vehicle to drive in accordance with the driving pattern described in the CONFIRMATION DRIVING PATTERN.
(e) Select the following menu items on the tester: DIAGNOSIS / ENHANCED OBD II / MONITOR INFO / MONITOR STATUS.
(f) Check that the status of O2S MON is COMPL.
If the status is still INCMPL, drive the vehicle according to the driving pattern again.
HINT:
- AVAIL indicates that the component has not been monitored yet.

- COMPL indicates that the component is functioning normally.
- INCMPL indicates that the component is malfunctioning.

(g) Select the following menu items: DIAGNOSIS / ENHANCED OBD II / MONITOR INFO / TEST RESULT / RANGE B1S1, then press the ENTER button.
(h) Check the test value of the A/F sensor output current during fuel-cut.

Result

Test Value	Proceed to
Within normal range (1.4 mA or more, and less than 3.6 mA)	A
Outside normal range (Less than 1.4 mA, or 3.6 mA or more)	B

ES

B → Go to step 20

A

3	READ VALUE OF INTELLIGENT TESTER (OUTPUT VOLTAGE OF A/F SENSOR)

(a) Connect the intelligent tester to the DLC3.
(b) Start the engine.
(c) Turn the tester on.
(d) Warm up the Air-Fuel Ratio (A/F) sensor at an engine speed of 2500 rpm for 90 seconds.
(e) Select the following menu items on the tester: DIAGNOSIS / ENHANCED OBD II / SNAPSHOT / MANUAL SNAPSHOT / USER DATA / AFS B1S1 or AFS B2S1 and ENGINE SPD.
(f) Check the A/F sensor voltage 3 times, when the engine is in each of the following conditions:
  (1) While idling (check for at least 30 seconds) (Step (1))
  (2) At an engine speed of approximately 2500 rpm (without any sudden changes in engine speed) (Step (2))
  (3) Raise the engine speed to 4000 rpm and then quickly release the accelerator pedal so that the throttle valve is fully closed (Step (3)).

Standard voltage

Conditions	A/F Sensor Voltage Variations	Reference
Steps (1) and (2)	Changes at approximately 3.3 V	Between 3.1 V and 3.5 V
Step (3)	Increases to 3.8 V or more	This occurs during engine deceleration (when fuel-cut performed)

HINT:
For more information, see the diagrams below.

Normal Conditon:

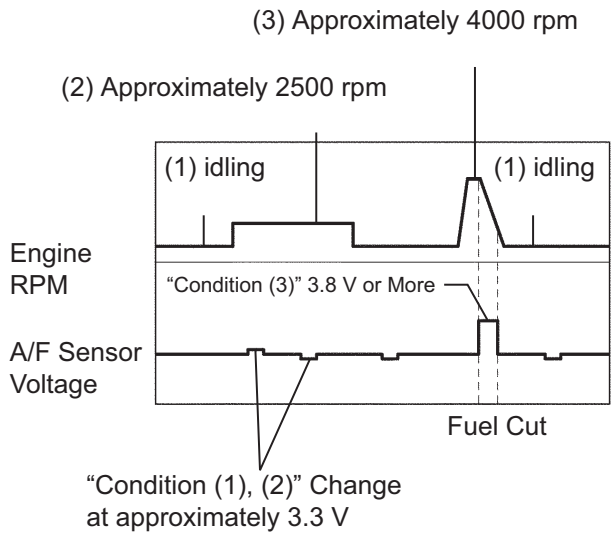

( ): Step No.

Malfunction Conditon:

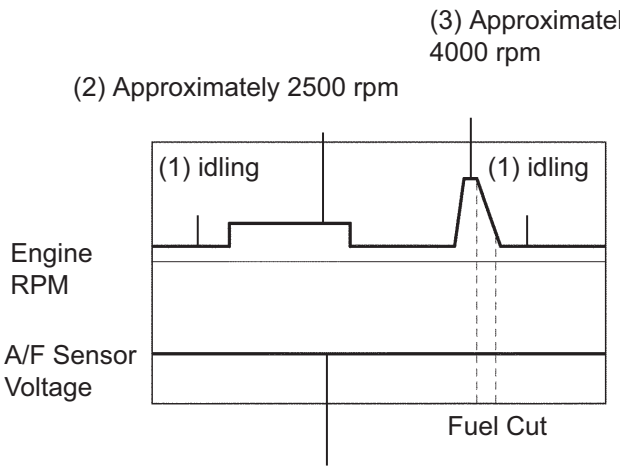

( ): Step No.

A072304E24

HINT:

- If the output voltage of the A/F sensor remains at approximately 3.3 V (see Malfunction Condition diagram) under any conditions, including those described on the previous page, the A/F sensor may have an open circuit. (This will also happen if the A/F sensor heater has an open circuit.)
- If the output voltage of the A/F sensor remains at either approximately 3.8 V or more, or 2.8 V or less (see Malfunction Condition diagram) under any conditions, including those described on the previous page, the A/F sensor may have a short circuit.
- The ECM stops fuel injection (fuel cut) during engine deceleration. This causes a lean condition and results in a momentary increase in the A/F sensor output voltage.
- The ECM must establish a closed throttle valve position learning value to perform fuel cut. If the battery terminal has been reconnected, the vehicle must be driven over 10 mph (16 km/h) to allow the ECM to learn the closed throttle valve position.
- When the vehicle is driven:
  The output voltage of the A/F sensor may be below 2.8 V during fuel enrichment. For the vehicle, this translates to a sudden increase in speed with the accelerator pedal fully depressed when trying to overtake another vehicle. The A/F sensor is functioning normally.

ES

- The A/F sensor is a current output element; therefore, the current is converted into a voltage inside the ECM. Measuring the voltage at the connectors of the A/F sensor or ECM will show a constant voltage result.

NG → Go to step 10

OK

4	PERFORM CONFIRMATION DRIVING PATTERN

ES

NEXT

5	CHECK WHETHER DTC OUTPUT RECURS (DTC P2195, P2196, P2197 OR P2198)

(a) Read DTCs using the intelligent tester.
(b) Select the following menu items: DIAGNOSIS / ENHANCED OBD II / DTC INFO / PENDING CODES.

Result

Display (DTC Output)	Proceed to
P2195, P2196, P2197 or P2198	A
No output	B

B → Go to step 9

A

6	REPLACE AIR FUEL RATIO SENSOR

(a) Replace the air fuel ratio sensor (for 2WD model (See page EC-19) or 4WD model (See page EC-26)).

NEXT

7	PERFORM CONFIRMATION DRIVING PATTERN

NEXT

8	CHECK WHETHER DTC OUTPUT RECURS (DTC P2195, P2196, P2197 OR P2198)

(a) Read the DTCs using the intelligent tester.
(b) Select the following menu items: DIAGNOSIS / ENHANCED OBD II / DTC INFO / PENDING CODES.

Result

Display (DTC Output)	Proceed to
No output	A
P2195, P2196, P2197 or P2198	B

B → REPLACE ECM

A

9 CONFIRM WHETHER VEHICLE HAS RUN OUT OF FUEL IN PAST

(a) Has the vehicle run out of fuel in the past?.

NO → CHECK FOR INTERMITTENT PROBLEMS

YES

DTC CAUSED BY RUNNING OUT OF FUEL

10 INSPECT AIR FUEL RATIO SENSOR (HEATER RESISTANCE)

Component Side:

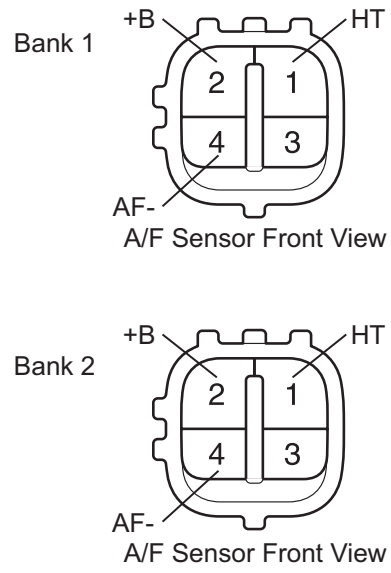

(a) Disconnect the A5 or A6 A/F sensor connector.

(b) Measure the resistance according to the value(s) in the table below.

Standard resistance:

Bank 1

Tester Connection	Specified Condition
HT (1) - +B (2)	1.8 to 3.4 Ω at 20°C (68°F)
HT (1) - AF- (4)	10 kΩ or higher

Bank 2

Tester Connection	Specified Condition
HT (1) - +B (2)	1.8 to 3.4 Ω at 20°C (68°F)
HT (1) - AF- (4)	10 kΩ or higher

(c) Reconnect the A/F sensor connector.

Result

Result	Proceed to
OK	A
NG (for 2WD model)	B
NG (for 4WD model)	C

B → REPLACE AIR FUEL RATIO SENSOR (See page EC-19)

C → REPLACE AIR FUEL RATIO SENSOR (See page EC-26)

A

11 INSPECT RELAY (A/F RELAY)

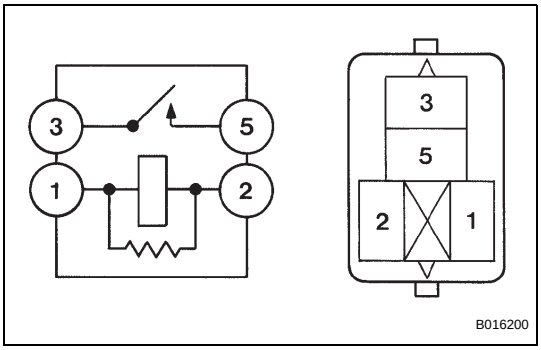

(a) Remove the A/F relay from No. 6 engine room relay block.
(b) Measure the resistance according to the value(s) in the table below.

Standard resistance

Tester Connection	Specified Condition
3 - 5	10 kΩ or higher
3 - 5	Below 1 Ω (when battery voltage applied to terminals 1 and 2)

(c) Reinstall the A/F relay.

NG → REPLACE RELAY (A/F RELAY)

OK

12 CHECK HARNESS AND CONNECTOR (A/F SENSOR - ECM)

Wire Harness Side:

A/F Sensor Connector

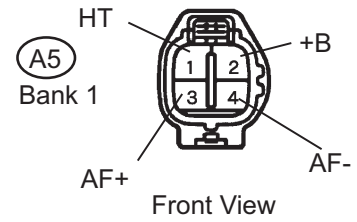

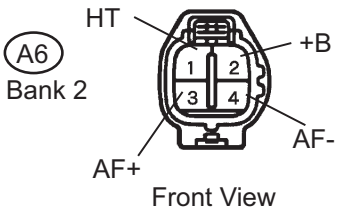

ECM Connector

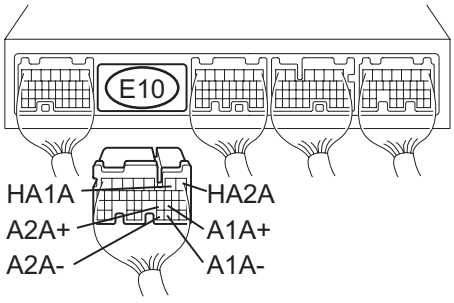

A136175E10

(a) Disconnect the A5 or A6 A/F sensor connector.
(b) Turn the ignition switch to the ON position.
(c) Measure the voltage according to the value(s) in the table below.

Standard voltage

Tester Connection	Specified Condition
+B (A5-2) - Body ground	9 to 14 V
+B (A6-2) - Body ground	9 to 14 V

(d) Turn the ignition switch off.
(e) Disconnect the E10 ECM connector.
(f) Measure the resistance according to the value(s) in the table below.

Standard resistance :

Check for open

Tester Connection	Specified Condition
HT (A5-1) - HA1A (E10-2)	Below 1 Ω
AF+ (A5-3) - A1A+ (E10-22)	Below 1 Ω
AF- (A5-4) - A1A- (E10-30)	Below 1 Ω
HT (A6-1) - HA2A (E10-1)	Below 1 Ω
AF+ (A6-3) - A2A+ (E10-23)	Below 1 Ω
AF- (A6-4) - A2A- (E10-31)	Below 1 Ω

Check for short

Tester Connection	Specified Condition
HT (A5-1) or HA1A (E10-2) - Body ground	10 kΩ or higher
AF+ (A5-3) or A1A+ (E10-22) - Body ground	10 kΩ or higher
AF- (A5-4) or A1A- (E10-30) - Body ground	10 kΩ or higher
HT (A6-1) or HA2A (E10-1) - Body ground	10 kΩ or higher
AF+ (A6-3) or A2A+ (E10-23) - Body ground	10 kΩ or higher
AF- (A6-4) or A2A- (E10-31) - Body ground	10 kΩ or higher

(g) Reconnect the ECM connector.
(h) Reconnect the A/F sensor connector.

Reference (System Diagram of Bank 1 Sensor 1):

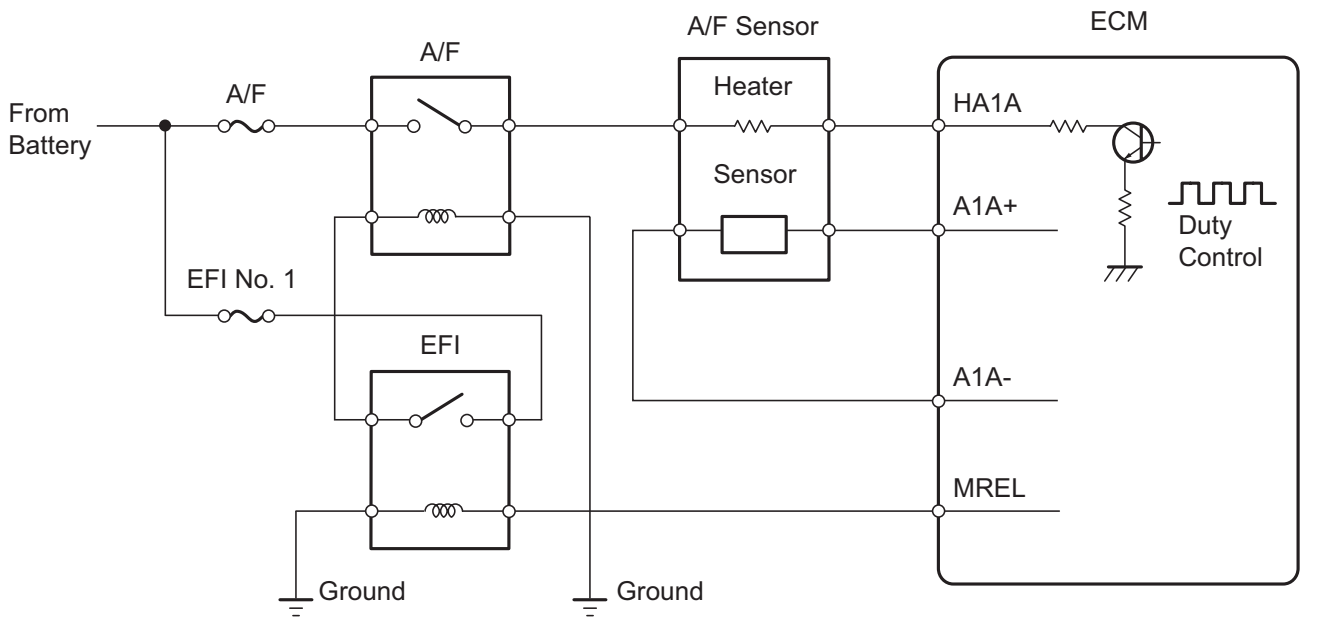

NG → **REPAIR OR REPLACE HARNESS OR CONNECTOR (A/F SENSOR - ECM)**

OK

13	CHECK INTAKE SYSTEM

(a) Check the intake system for vacuum leakage.
OK:
No leakage from intake system.

NG → **REPAIR OR REPLACE INTAKE SYSTEM**

OK

14	CHECK FUEL PRESSURE (HIGH PRESSURE SIDE AND LOW PRESSURE SIDE)

(a) Check the fuel pressure (See page FU-7).

NG → **REPAIR OR REPLACE FUEL SYSTEM**

OK

15	INSPECT FUEL INJECTOR ASSEMBLY

(a) Check the injector injection (whether fuel volume is high or low, and whether injection pattern is poor) (See page FU-16).

ES

NG → REPLACE FUEL INJECTOR ASSEMBLY (See page FU-13)

OK

16 REPLACE AIR FUEL RATIO SENSOR

(a) Replace the air fuel ratio sensor (for 2WD model (See page EC-19) or 4WD model (See page EC-26)).

NEXT

ES

17 PERFORM CONFIRMATION DRIVING PATTERN

NEXT

18 CHECK WHETHER DTC OUTPUT RECURS (DTC P2195, P2196, P2197 OR P2198)

(a) Read the DTCs using the intelligent tester.
(b) Select the following menu items: DIAGNOSIS / ENHANCED OBD II / DTC INFO / PENDING CODES.

Result

Display (DTC Output)	Proceed to
No output	A
P2195, P2196, P2197 or P2198	B

B → REPLACE ECM AND PERFORM CONFIRMATION DRIVING PATTERN

A

19 CONFIRM WHETHER VEHICLE HAS RUN OUT OF FUEL IN PAST

(a) Has the vehicle run out of fuel in the past?.

NO → CHECK FOR INTERMITTENT PROBLEMS

YES

DTC CAUSED BY RUNNING OUT OF FUEL

20 REPLACE AIR FUEL RATIO SENSOR

(a) Replace the air fuel ratio sensor (for 2WD model (See page EC-19) or 4WD model (See page EC-26)).

NEXT

21	PERFORM CONFIRMATION DRIVING PATTERN

NEXT

22	CHECK WHETHER DTC OUTPUT RECURS (DTC P2195, P2196, P2197 OR P2198)

(a) Connect the intelligent tester to the DLC3.
(b) Turn the ignition switch to the ON position and turn the tester on.
(c) Read the DTCs using the intelligent tester.
(d) Select the following menu items: DIAGNOSIS / ENHANCED OBD II / DTC INFO / PENDING CODES.

ES

Result

Display (DTC Output)	Proceed to
No output	A
P2195, P2196, P2197 or P2198 (A/F sensor pending DTCs)	B

B → **REPLACE ECM (See page ES-498)**

A

END