VVT SENSOR

COMPONENTS

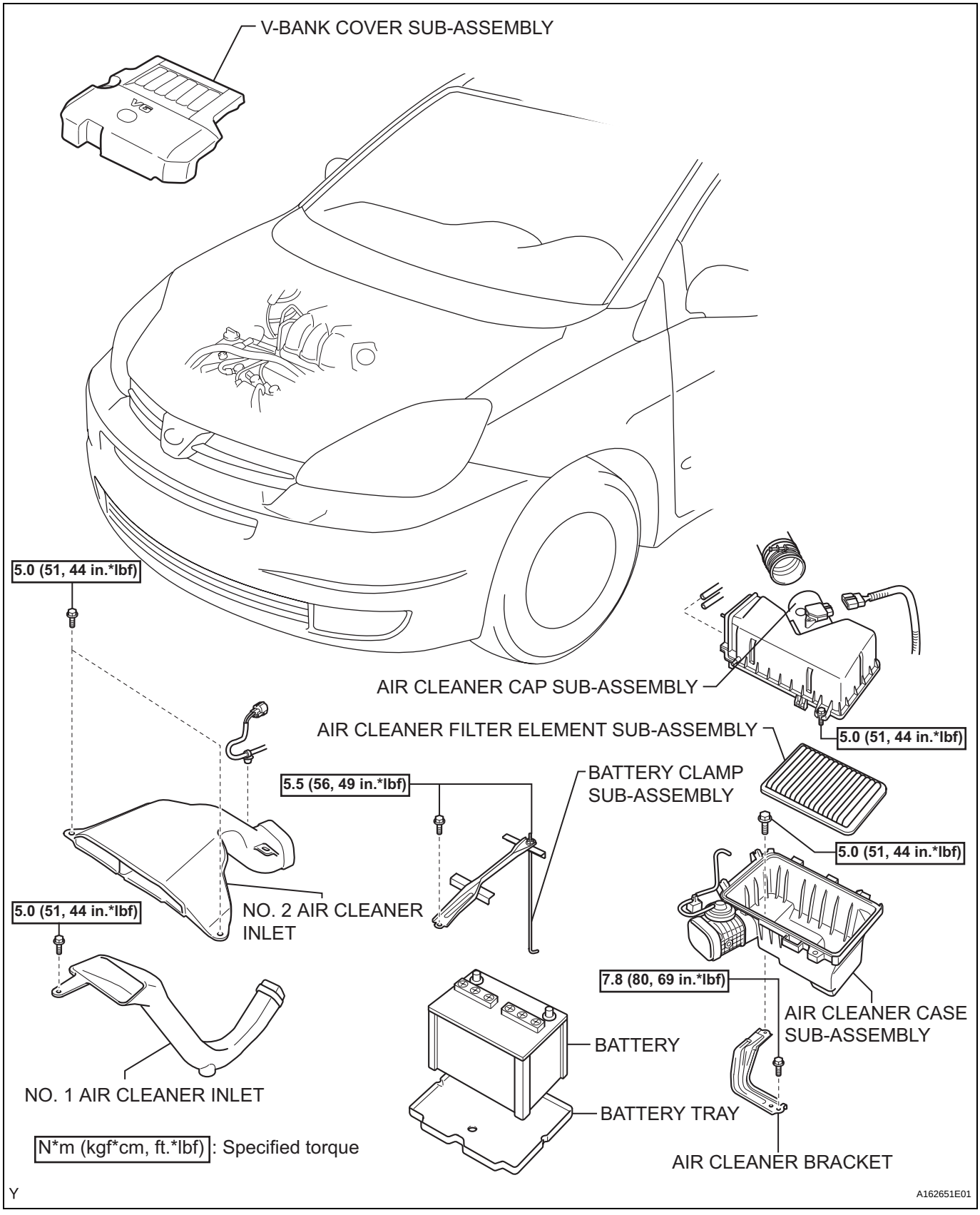

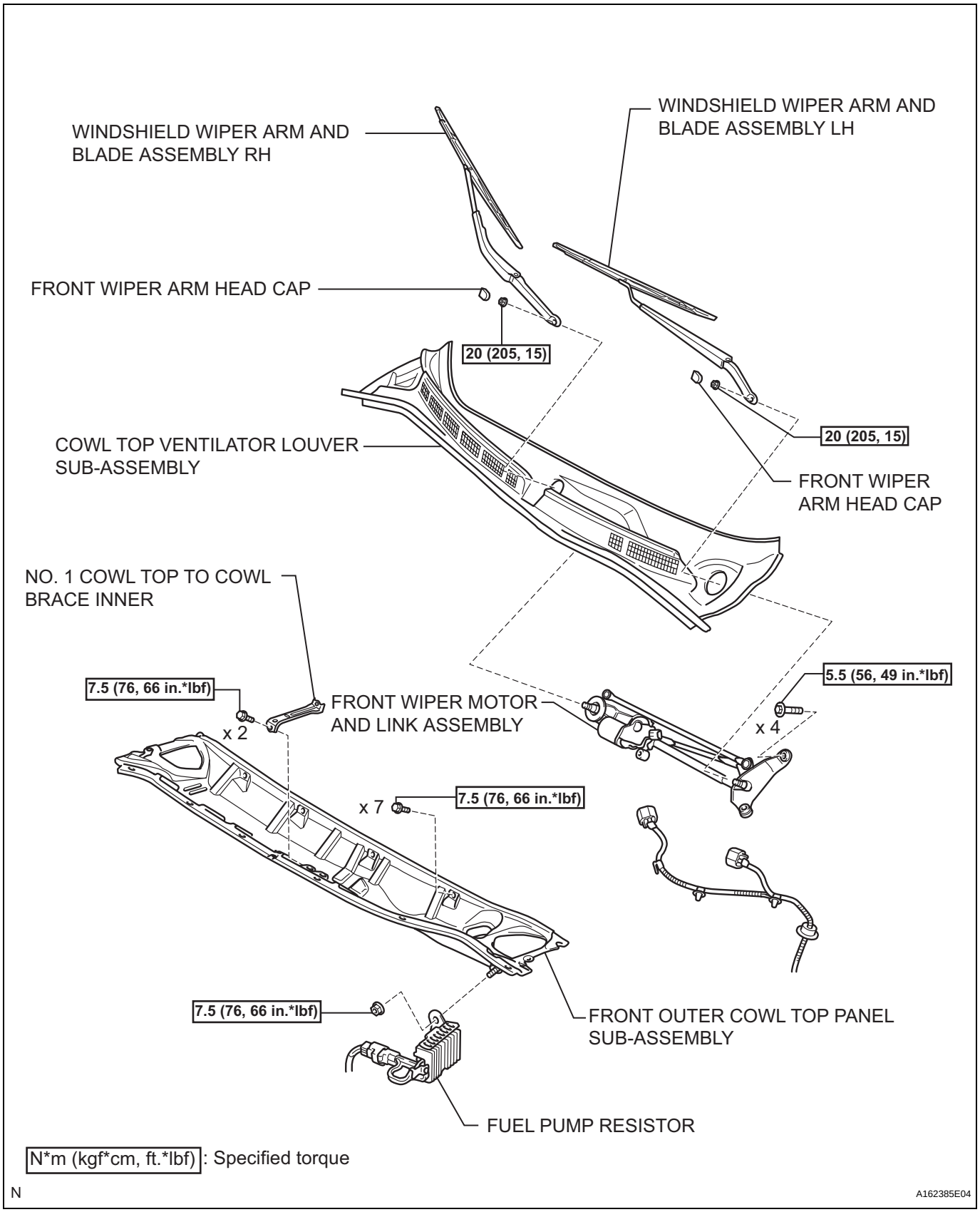
WINDSHIELD WIPER ARM AND BLADE ASSEMBLY RH
WINDSHIELD WIPER ARM AND BLADE ASSEMBLY LH
FRONT WIPER ARM HEAD CAP
20 (205, 15)
20 (205, 15)
COWL TOP VENTILATOR LOUVER SUB-ASSEMBLY
FRONT WIPER ARM HEAD CAP
NO. 1 COWL TOP TO COWL BRACE INNER
7.5 (76, 66 in.*lbf)
x 2
FRONT WIPER MOTOR AND LINK ASSEMBLY
5.5 (56, 49 in.*lbf)
x 4
x 7
7.5 (76, 66 in.*lbf)
7.5 (76, 66 in.*lbf)
FRONT OUTER COWL TOP PANEL SUB-ASSEMBLY
FUEL PUMP RESISTOR
N*m (kgf*cm, ft.*lbf): Specified torque
N
A162385E04

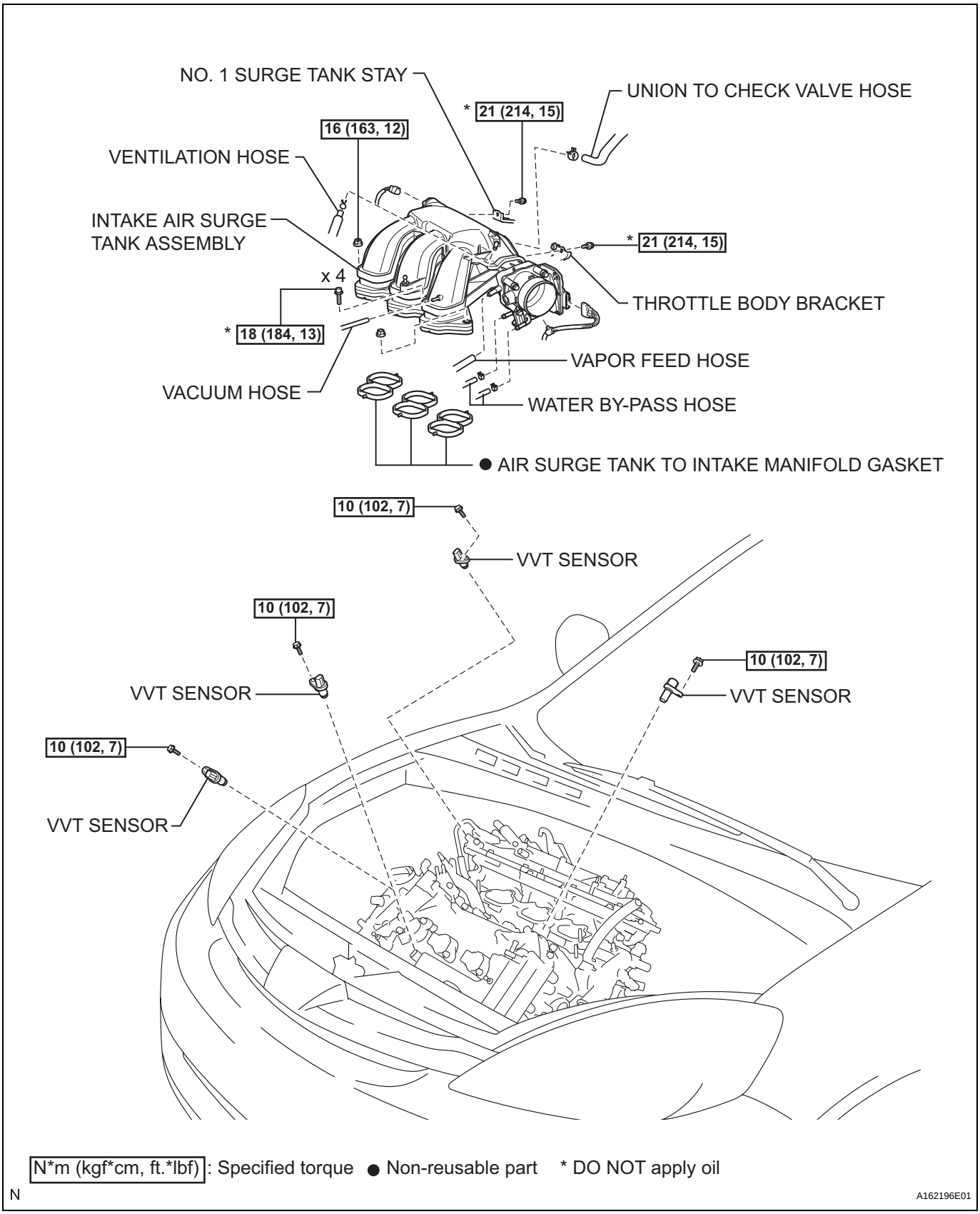

N*m (kgf*cm, ft.*lbf): Specified torque ● Non-reusable part * DO NOT apply oil

N

A162196E01