CRANKSHAFT POSITION SENSOR

COMPONENTS

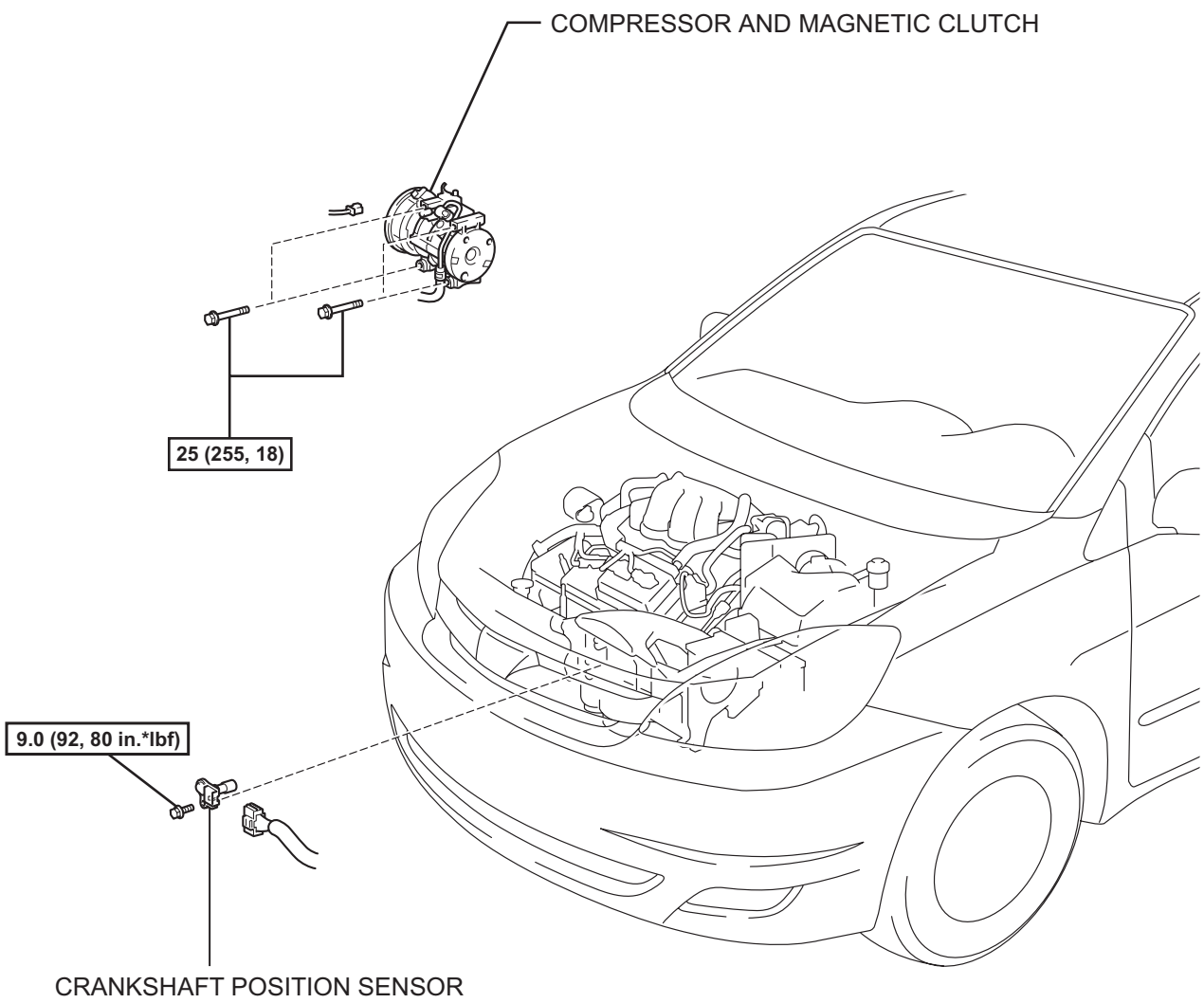

N*m (kgf*cm, ft.*lbf) : Specified torque

N

A162204E01

ES

REMOVAL

1. REMOVE COMPRESSOR AND MAGNETIC CLUTCH

HINT:

(See page AC-227)

2. REMOVE CRANKSHAFT POSITION SENSOR

(a) Disconnect the crankshaft position sensor connector.

(b) Remove the bolt, and then remove the crankshaft position sensor.

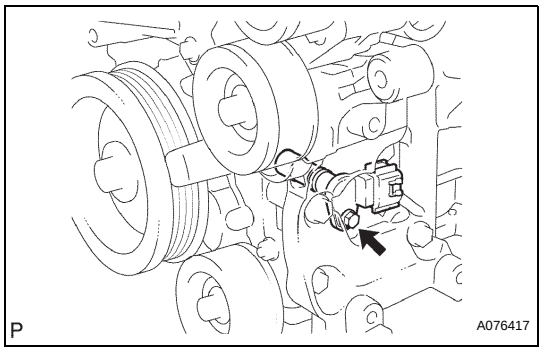

INSPECTION

1. INSPECT CRANKSHAFT POSITION SENSOR

(a) Using an ohmmeter, measure the resistance between the terminals.

Standard resistance

Temperature	Specified Condition
Cold	1,630 to 2,740 Ω
Hot	2,065 to 3,225 Ω

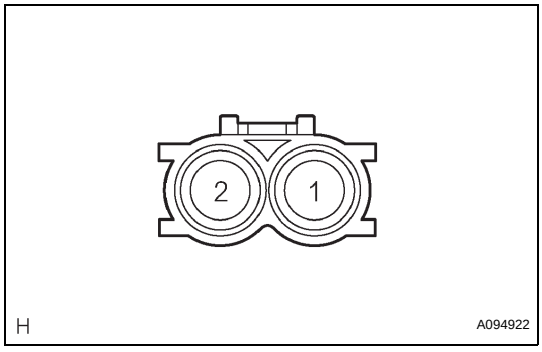

NOTICE:

- **"Cold" and "Hot" mean the temperature of the coils themselves.**
- **"Cold" is from -10°C (14°F) to 50°C (122°F) and "Hot" is from 50°C (122°F) to 100°C (212°F).**

If the resistance is not as specified, replace the crankshaft position sensor.