ENGINE FRONT OIL SEAL

COMPONENTS

EM

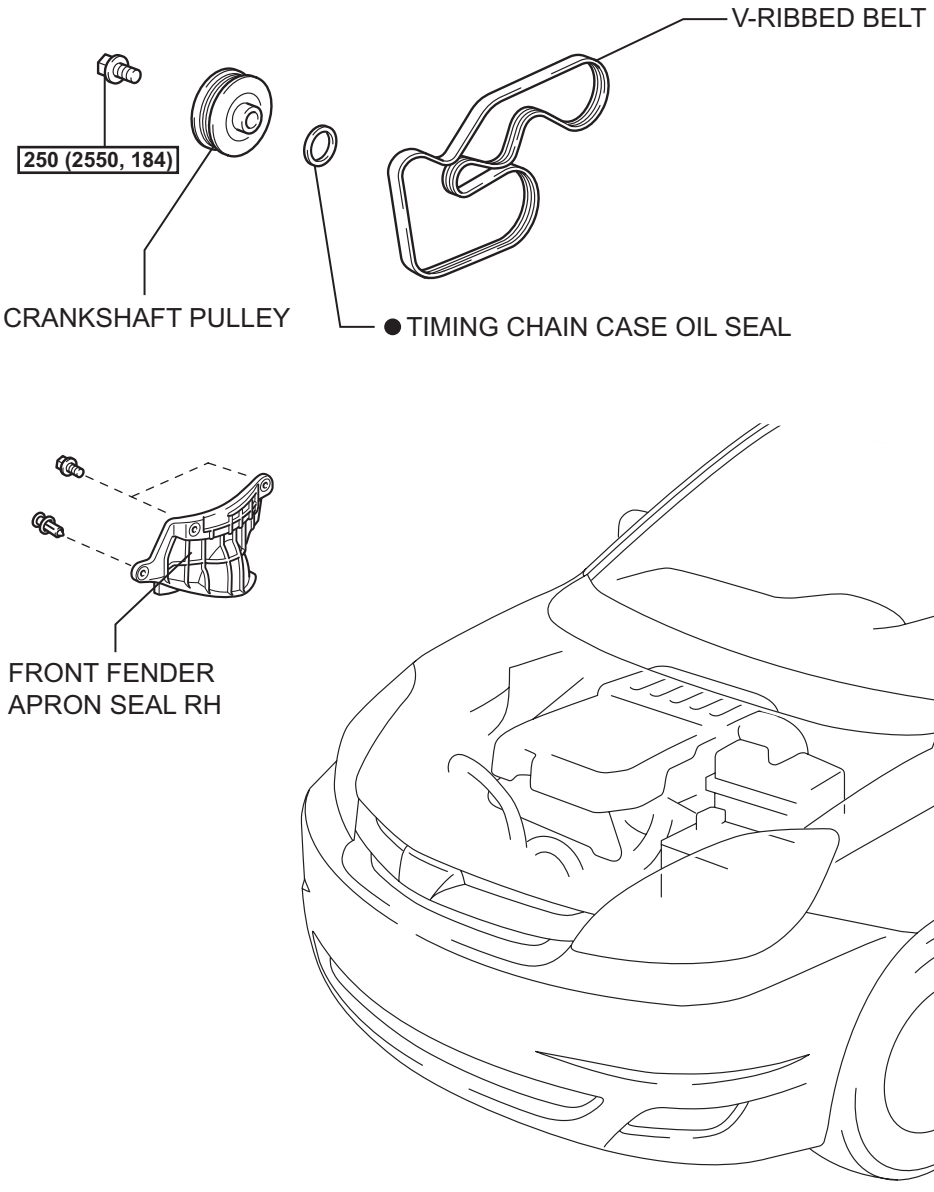

N*m (kgf*cm, ft.*lbf): Specified torque

● Non-reusable part

N

A162377E01

REMOVAL

1. **REMOVE FRONT WHEEL RH**
2. **REMOVE FRONT FENDER APRON SEAL RH (See page EM-26)**
3. **REMOVE V-RIBBED BELT (See page EM-6)**
4. **REMOVE CRANKSHAFT PULLEY**
   (a) Using SST, loosen the crankshaft pulley bolt.
   SST 09213-70011 (09213-70020), 09330-00021

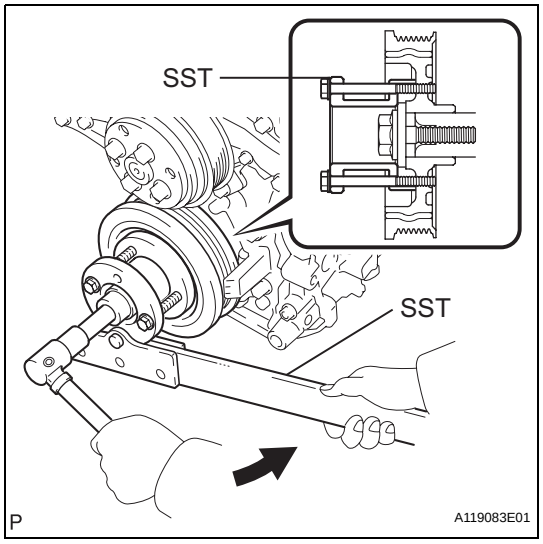

   (b) Using SST, remove the crankshaft pulley bolt and crankshaft pulley.
   SST 09950-50013 (09951-05010, 09952-05010, 09953-05020, 09954-05021)

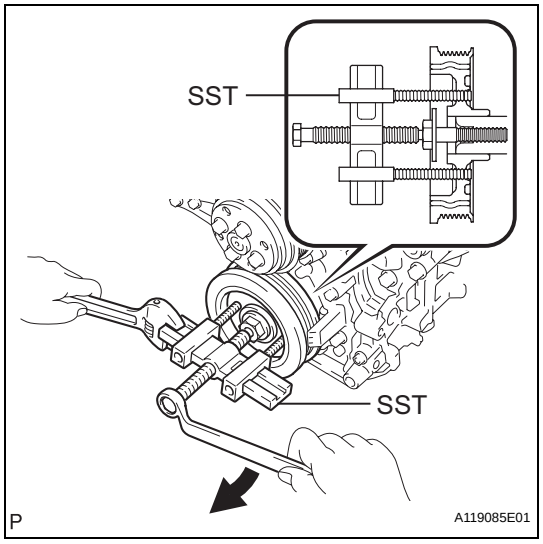

5. **REMOVE TIMING CHAIN CASE OIL SEAL**
   (a) Using a screwdriver, pry out the oil seal.
   HINT:
   Tape the screwdriver tip before use.
   NOTICE:
   After the removal, check the crankshaft for damage. If it is damaged, smooth the surface with 400-grit sandpaper.

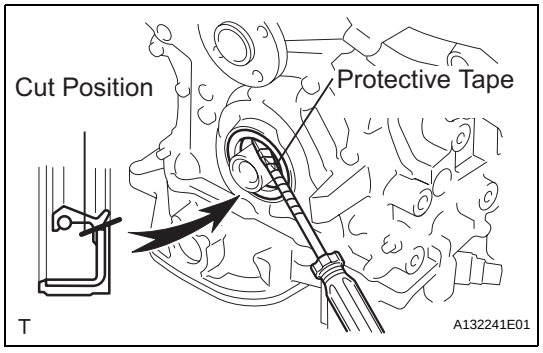

EM

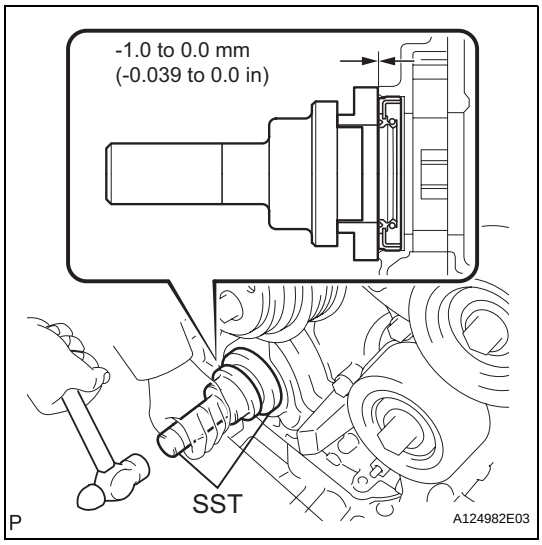

INSTALLATION

1. INSTALL TIMING CHAIN CASE OIL SEAL

(a) Apply MP grease to a new oil seal lip.

(b) Using SST and a hammer, tap in the oil seal until its surface is flush with the timing chain cover edge.
SST 09223-22010, 09506-35010
NOTICE:
- **Keep the lip free of foreign matter.**
- **Do not tap the oil seal at an angle.**

2. INSTALL CRANKSHAFT PULLEY

(a) Align the pulley set key with the key groove of the pulley, and slide on the pulley.

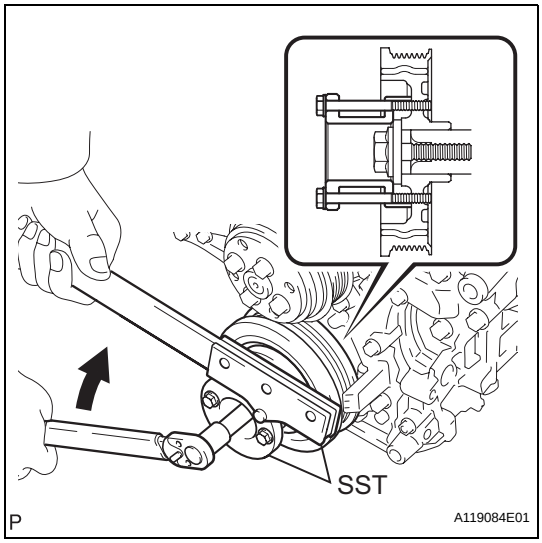

(b) Using SST, install the pulley bolt.
SST 09213-70011 (09213-70020), 09330-00021
Torque: 250 N*m (2550 kgf*cm, 184 ft.*lbf)

3. INSTALL V-RIBBED BELT (See page EM-7)

4. INSTALL FRONT FENDER APRON SEAL RH (See page EM-62)

5. INSTALL FRONT WHEEL RH
Torque: 103 N*m (1050 kgf*cm, 76 ft.*lbf)