ENGINE REAR OIL SEAL

COMPONENTS

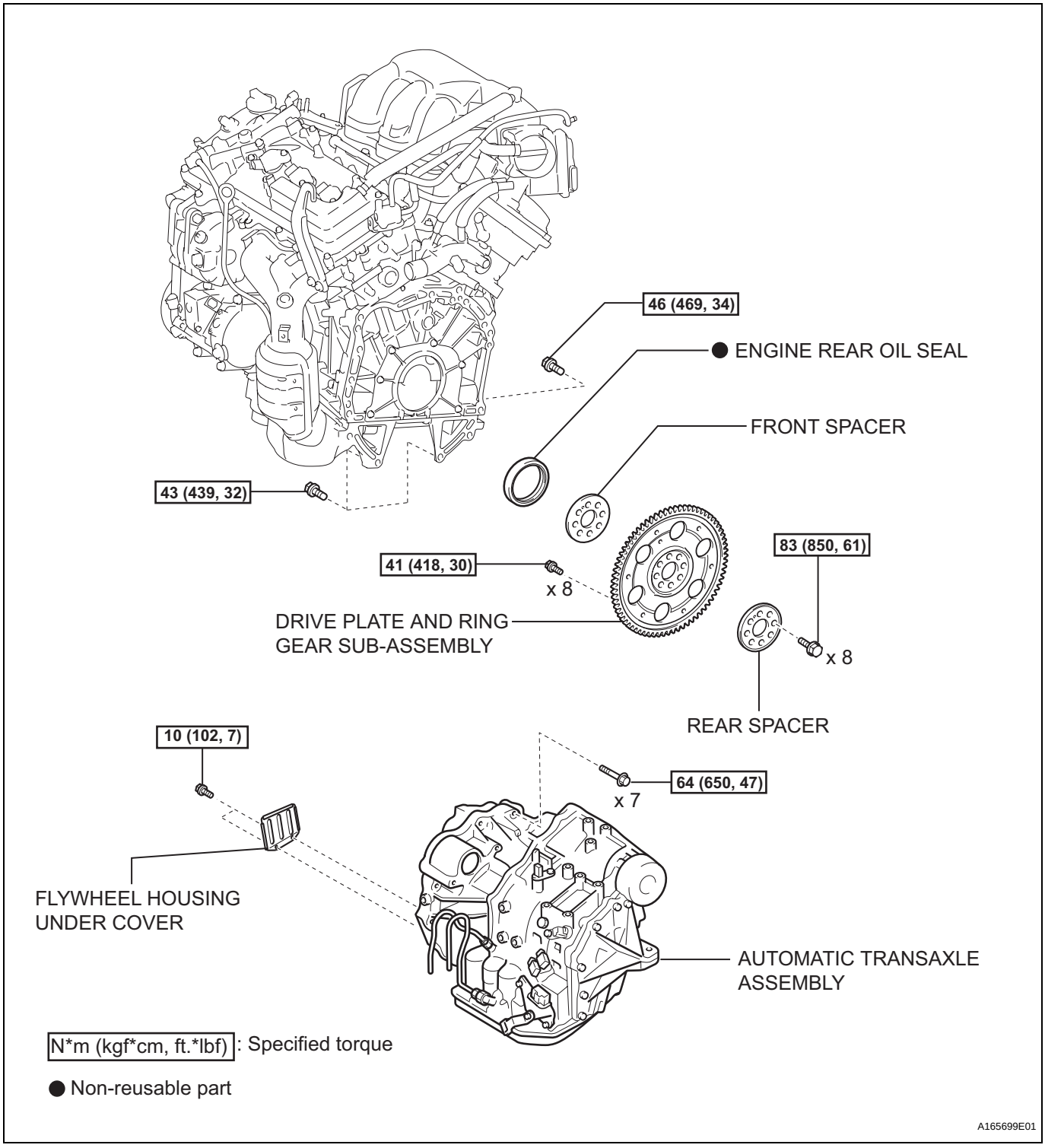

EM

EM

REMOVAL

1. **REMOVE AUTOMATIC TRANSAXLE ASSEMBLY (for 2WD)**
   HINT:
   See page AX-163.

2. **REMOVE AUTOMATIC TRANSAXLE ASSEMBLY (for 4WD)**
   HINT:
   See page AX-167.

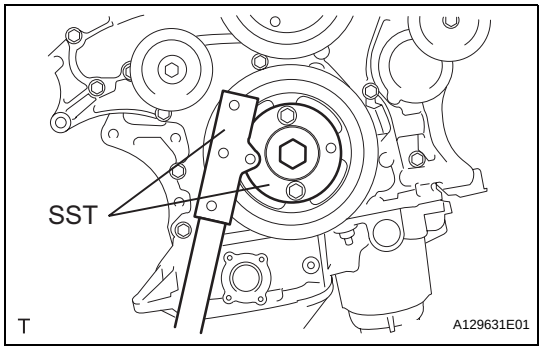

3. **REMOVE DRIVE PLATE AND RING GEAR SUB-ASSEMBLY**
   (a) Using SST, hold the crankshaft.
   SST 09213-70011 (09213-70020), 09330-00021

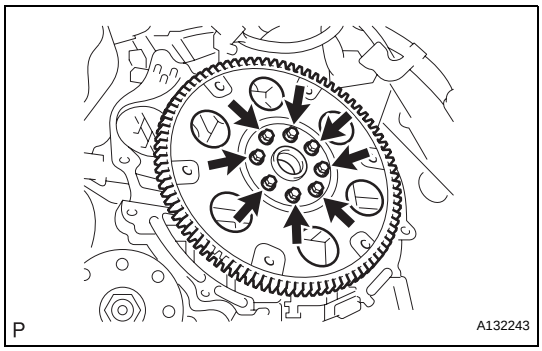

   (b) Remove the 8 bolts, front spacer, drive plate and rear spacer.

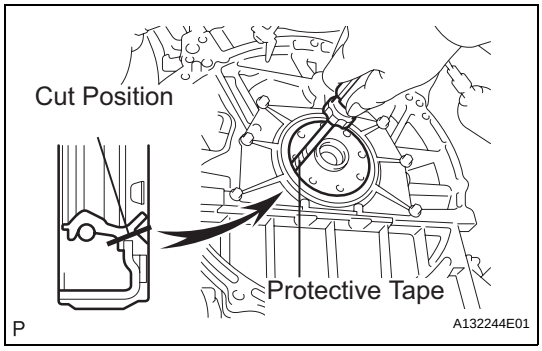

4. **REMOVE ENGINE REAR OIL SEAL**
   (a) Using a knife, cut off the oil seal lip.
   (b) Using a screwdriver, pry out the oil seal.
   NOTICE:
   Be careful not to damage the crankshaft. Tape the screwdriver tip before use.

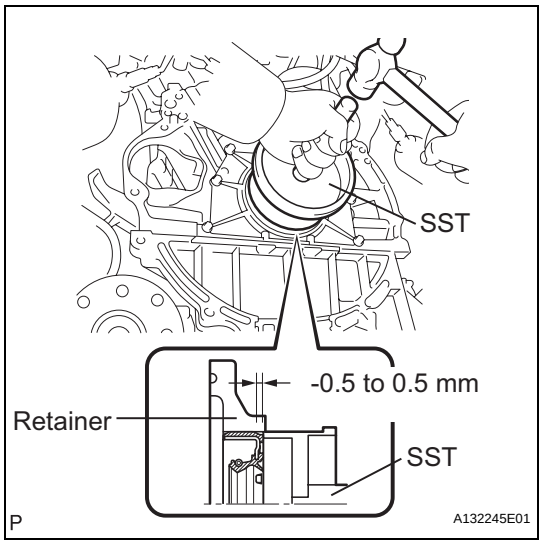

INSTALLATION

1. INSTALL ENGINE REAR OIL SEAL

(a) Apply MP grease to a new oil seal lip.

(b) Using SST and a hammer, tap in the oil seal.

SST 09223-15030, 09950-70010 (09951-07150)

Oil seal tap in depth:

-0.5 to 0.5 mm (-0.020 to 0.020 in.)

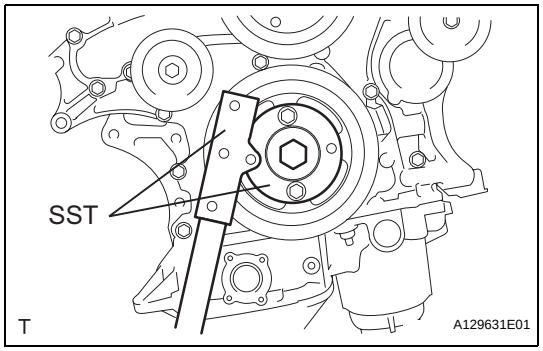

2. INSTALL DRIVE PLATE AND RING GEAR SUB-ASSEMBLY

(a) Using SST, hold the crankshaft.

SST 09213-70011 (09213-70020), 09330-00021

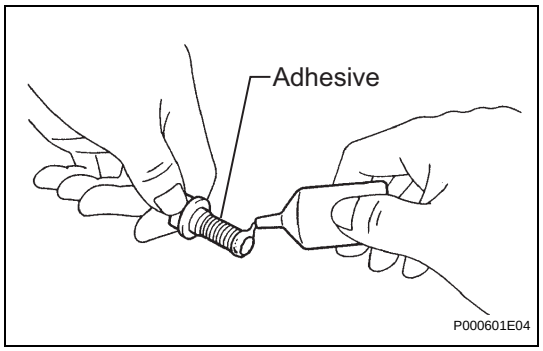

(b) Apply adhesive to 2 or 3 threads of the mounting bolt end.

Adhesive:

Part No. 08833-00070, THREE BOND 1324 or equivalent

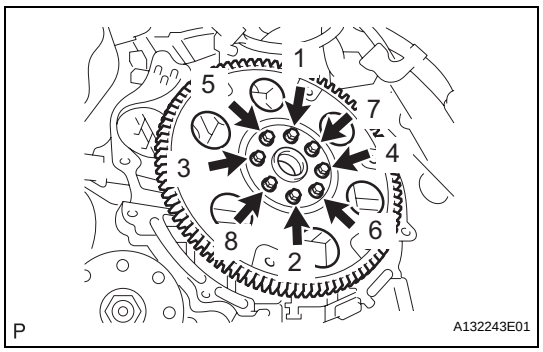

(1) Install the front spacer, drive plate and rear spacer on the crankshaft.

(2) Install and tighten the 8 mounting bolts uniformly in several steps.

Torque: 83 N*m (850 kgf*cm, 61 ft.*lbf)

3. INSTALL AUTOMATIC TRANSAXLE ASSEMBLY (for 2WD)

HINT:

See page AX-166.

4. INSTALL AUTOMATIC TRANSAXLE ASSEMBLY (for 4WD)

HINT:

See page AX-167.