ENGINE ASSEMBLY

COMPONENTS

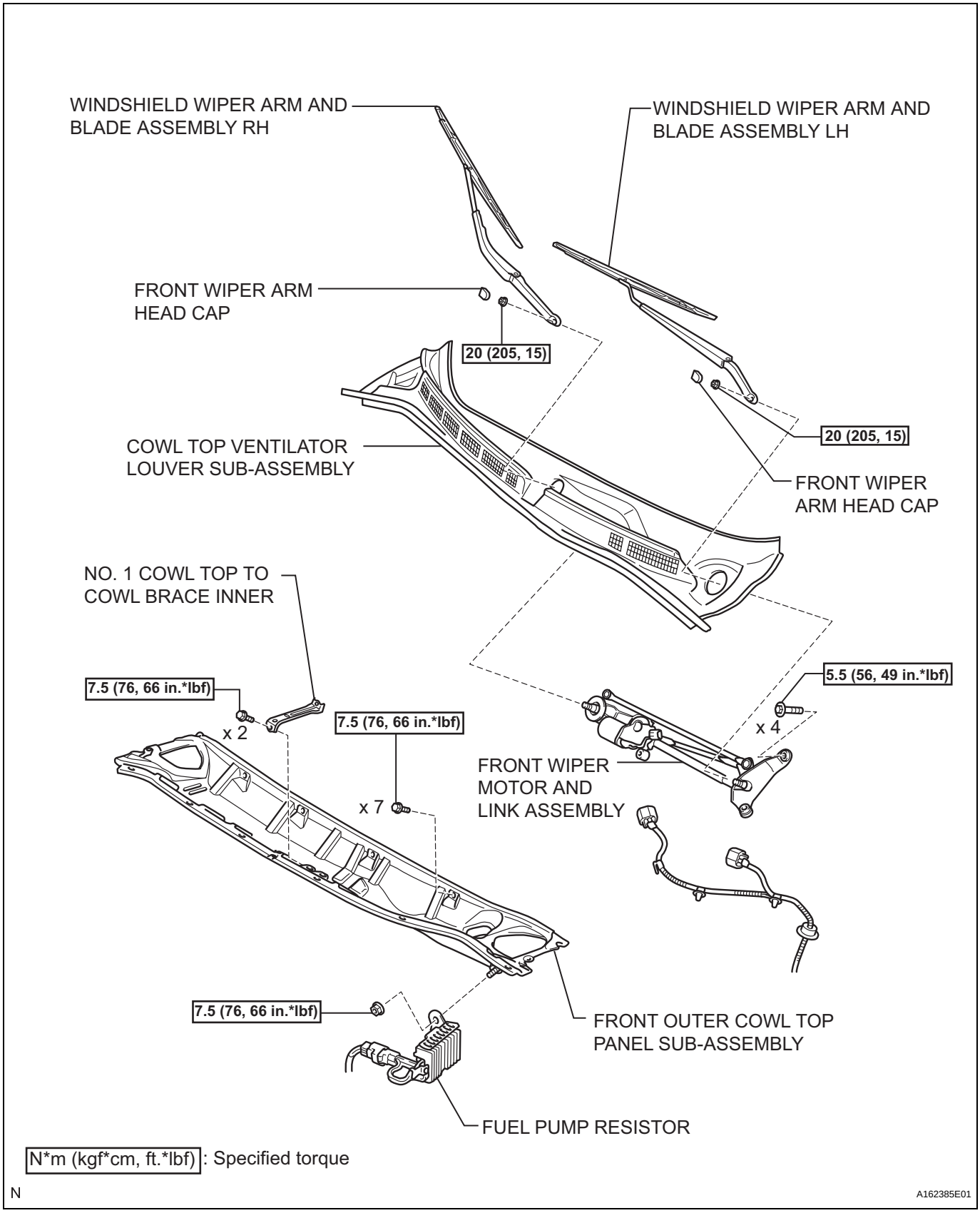

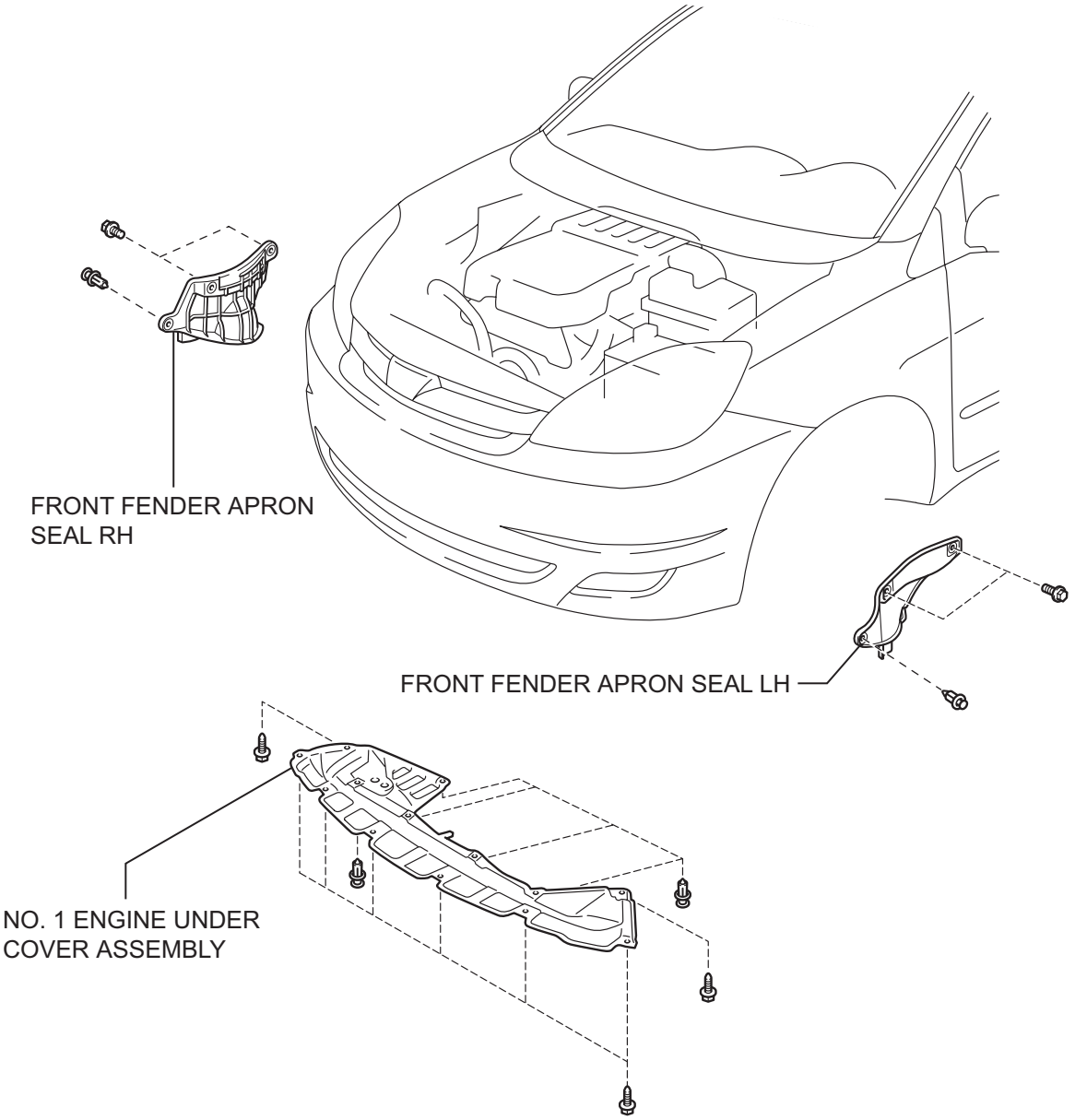

N

A162378E01

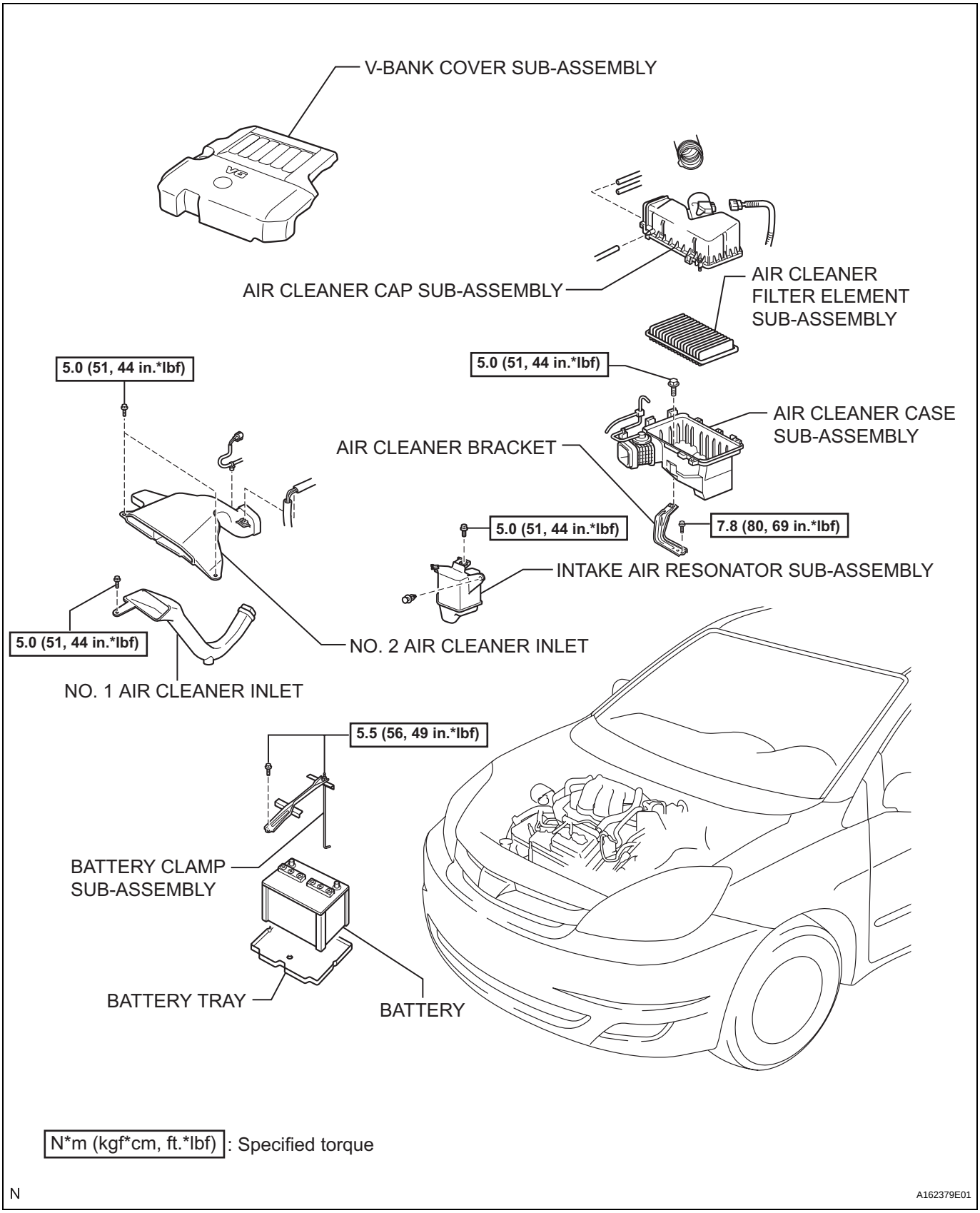
V-BANK COVER SUB-ASSEMBLY
AIR CLEANER CAP SUB-ASSEMBLY
AIR CLEANER FILTER ELEMENT SUB-ASSEMBLY
5.0 (51, 44 in.*lbf)
5.0 (51, 44 in.*lbf)
AIR CLEANER CASE SUB-ASSEMBLY
AIR CLEANER BRACKET
7.8 (80, 69 in.*lbf)
5.0 (51, 44 in.*lbf)
INTAKE AIR RESONATOR SUB-ASSEMBLY
5.0 (51, 44 in.*lbf)
NO. 2 AIR CLEANER INLET
NO. 1 AIR CLEANER INLET
5.5 (56, 49 in.*lbf)
BATTERY CLAMP SUB-ASSEMBLY
BATTERY TRAY
BATTERY
N*m (kgf*cm, ft.*lbf) : Specified torque
N
A162379E01

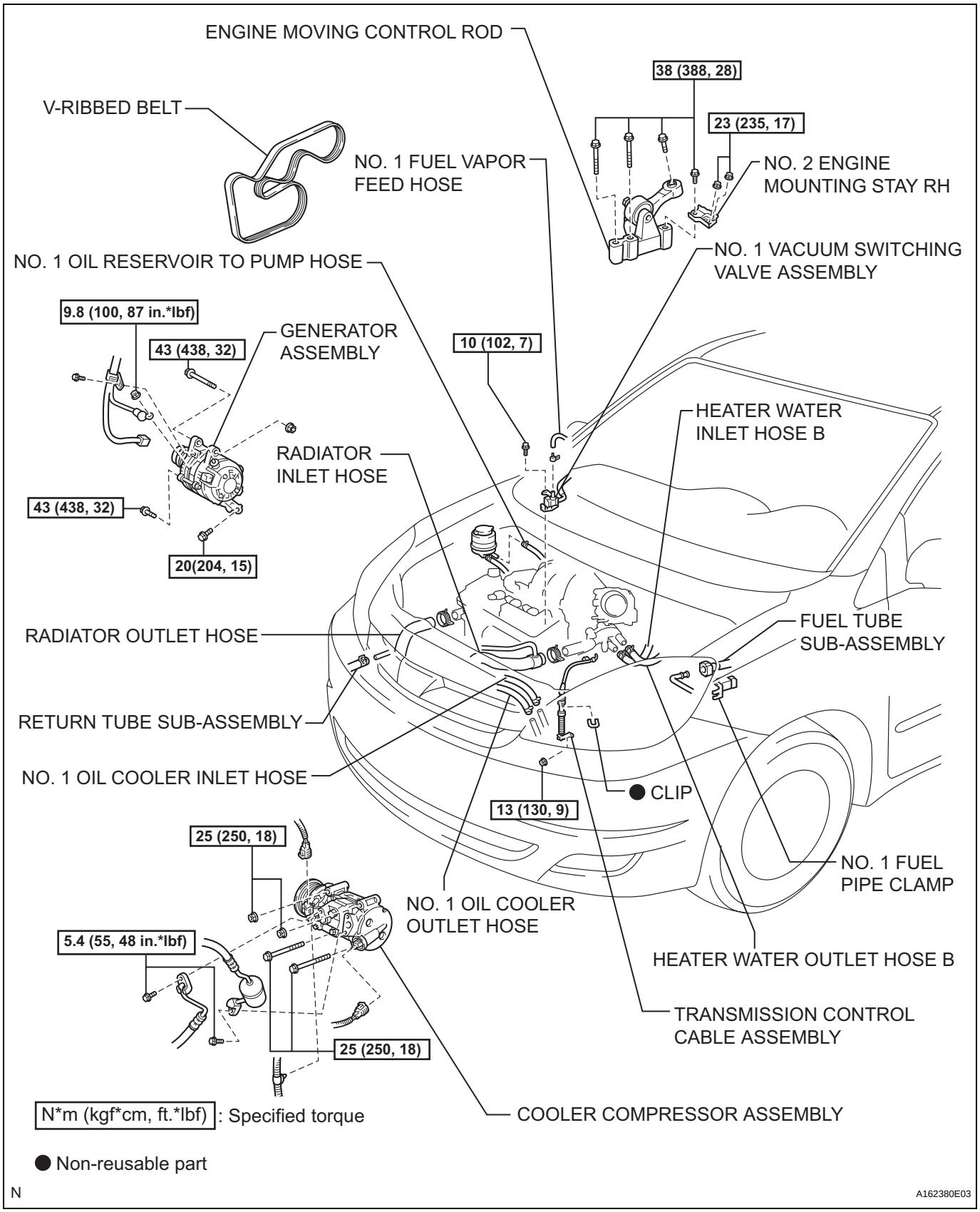
ENGINE MOVING CONTROL ROD
38 (388, 28)
V-RIBBED BELT
23 (235, 17)
NO. 1 FUEL VAPOR FEED HOSE
NO. 2 ENGINE MOUNTING STAY RH
NO. 1 VACUUM SWITCHING VALVE ASSEMBLY
NO. 1 OIL RESERVOIR TO PUMP HOSE
9.8 (100, 87 in.*lbf)
GENERATOR ASSEMBLY
43 (438, 32)
10 (102, 7)
HEATER WATER INLET HOSE B
RADIATOR INLET HOSE
43 (438, 32)
20(204, 15)
RADIATOR OUTLET HOSE
FUEL TUBE SUB-ASSEMBLY
RETURN TUBE SUB-ASSEMBLY
NO. 1 OIL COOLER INLET HOSE
● CLIP
13 (130, 9)
25 (250, 18)
NO. 1 FUEL PIPE CLAMP
NO. 1 OIL COOLER OUTLET HOSE
5.4 (55, 48 in.*lbf)
HEATER WATER OUTLET HOSE B
TRANSMISSION CONTROL CABLE ASSEMBLY
25 (250, 18)
N*m (kgf*cm, ft.*lbf) : Specified torque
COOLER COMPRESSOR ASSEMBLY
● Non-reusable part
N
A162380E03

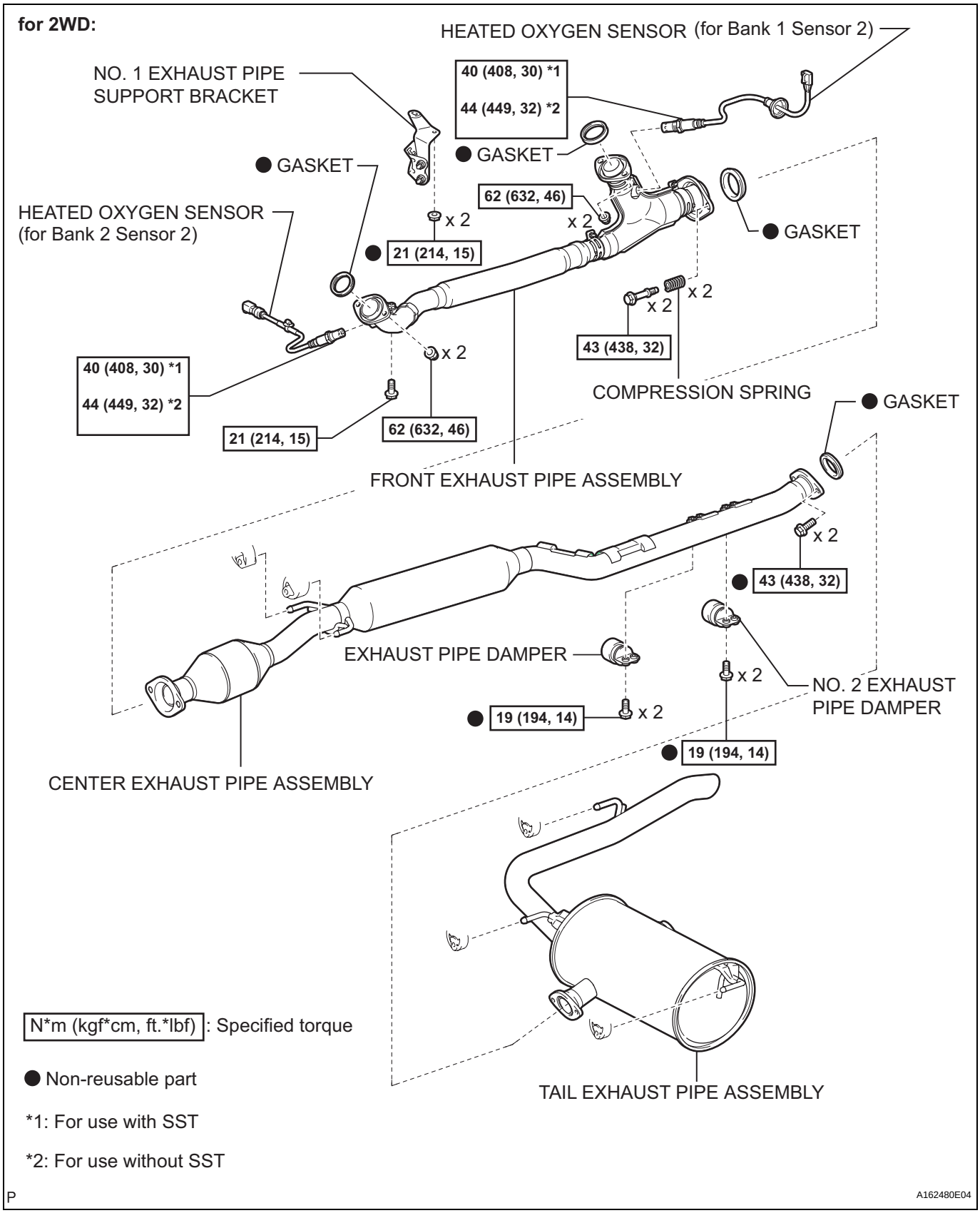
for 2WD:
HEATED OXYGEN SENSOR (for Bank 1 Sensor 2)
NO. 1 EXHAUST PIPE SUPPORT BRACKET
40 (408, 30) *1
44 (449, 32) *2
GASKET
GASKET
HEATED OXYGEN SENSOR (for Bank 2 Sensor 2)
62 (632, 46)
x 2
x 2
21 (214, 15)
GASKET
x 2
x 2
43 (438, 32)
x 2
40 (408, 30) *1
44 (449, 32) *2
21 (214, 15)
62 (632, 46)
COMPRESSION SPRING
GASKET
FRONT EXHAUST PIPE ASSEMBLY
x 2
43 (438, 32)
EXHAUST PIPE DAMPER
x 2
NO. 2 EXHAUST PIPE DAMPER
19 (194, 14)
x 2
19 (194, 14)
CENTER EXHAUST PIPE ASSEMBLY
TAIL EXHAUST PIPE ASSEMBLY
N*m (kgf*cm, ft.*lbf): Specified torque
Non-reusable part
*1: For use with SST
*2: For use without SST
A162480E04

for 4WD:

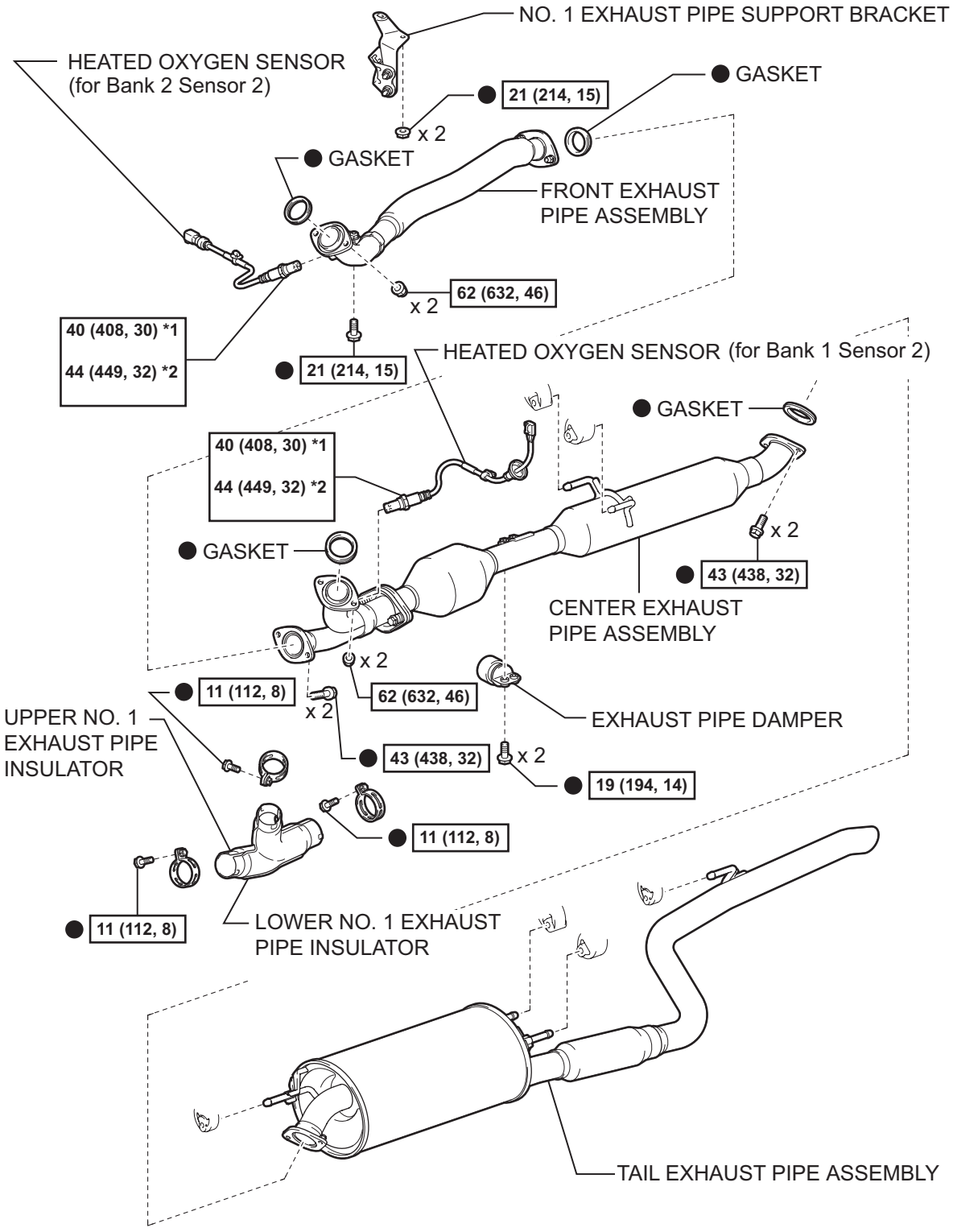

N*m (kgf*cm, ft.*lbf) : Specified torque ● Non-reusable part *1: For use with SST *2: For use without SST

P

A162160E05

EM

EM

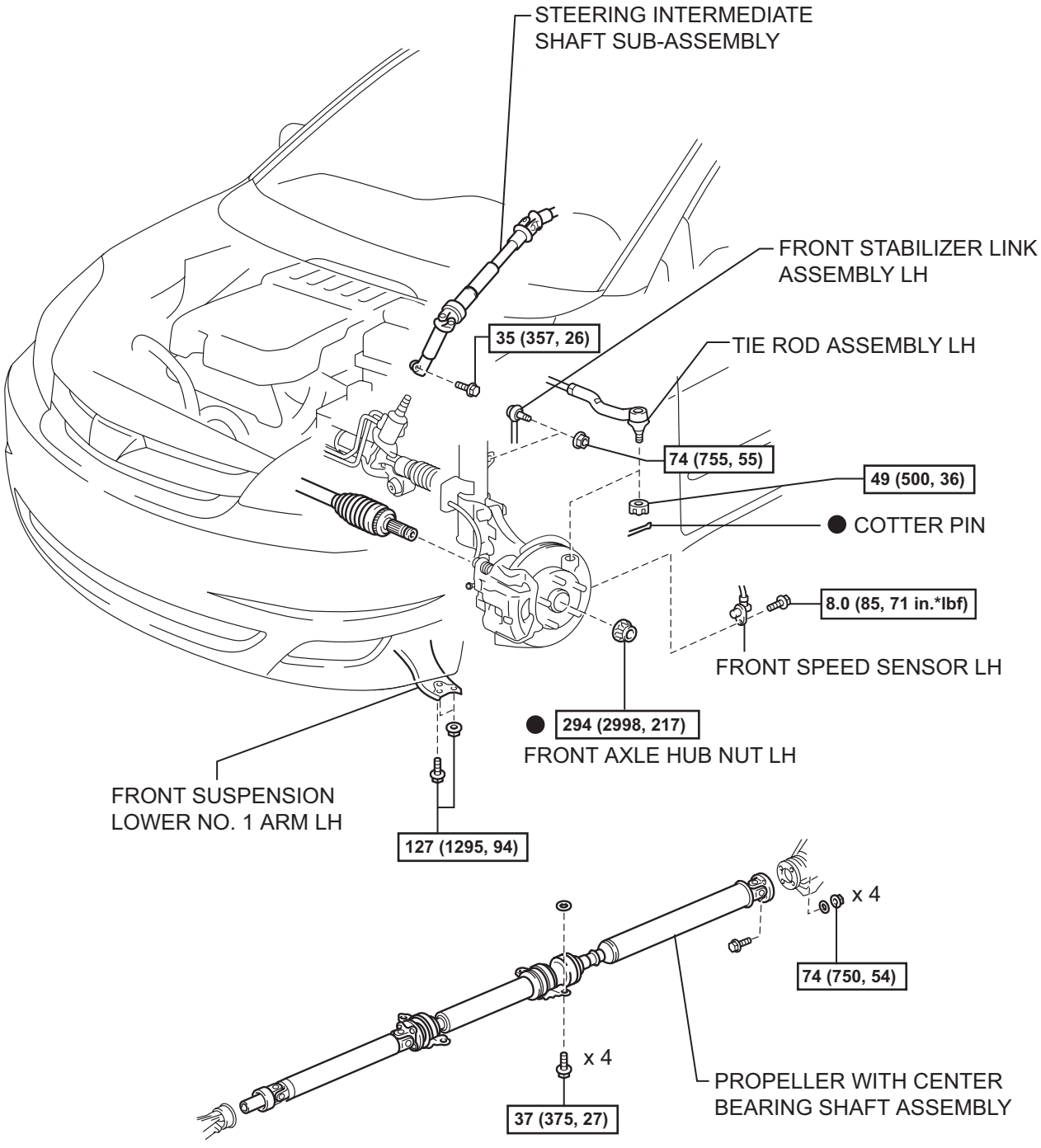

N*m (kgf*cm, ft.*lbf) : Specified torque

● Non-reusable part

N

A162381E01

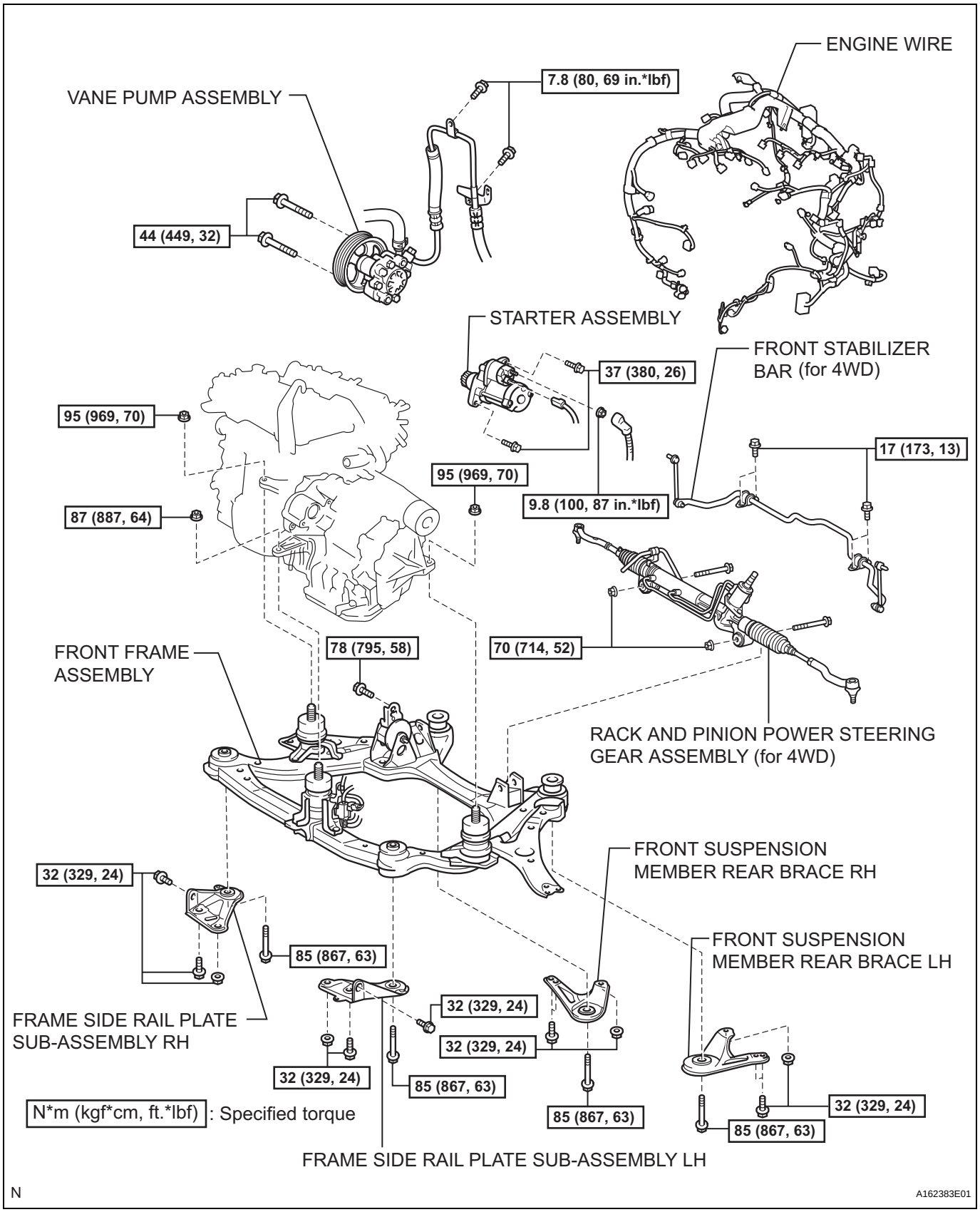
ENGINE WIRE
VANE PUMP ASSEMBLY
7.8 (80, 69 in.*lbf)
44 (449, 32)
STARTER ASSEMBLY
FRONT STABILIZER BAR (for 4WD)
37 (380, 26)
95 (969, 70)
17 (173, 13)
95 (969, 70)
9.8 (100, 87 in.*lbf)
87 (887, 64)
70 (714, 52)
78 (795, 58)
FRONT FRAME ASSEMBLY
RACK AND PINION POWER STEERING GEAR ASSEMBLY (for 4WD)
FRONT SUSPENSION MEMBER REAR BRACE RH
32 (329, 24)
FRONT SUSPENSION MEMBER REAR BRACE LH
85 (867, 63)
32 (329, 24)
FRAME SIDE RAIL PLATE SUB-ASSEMBLY RH
32 (329, 24)
32 (329, 24)
85 (867, 63)
N*m (kgf*cm, ft.*lbf) : Specified torque
85 (867, 63)
32 (329, 24)
85 (867, 63)
FRAME SIDE RAIL PLATE SUB-ASSEMBLY LH
N
A162383E01

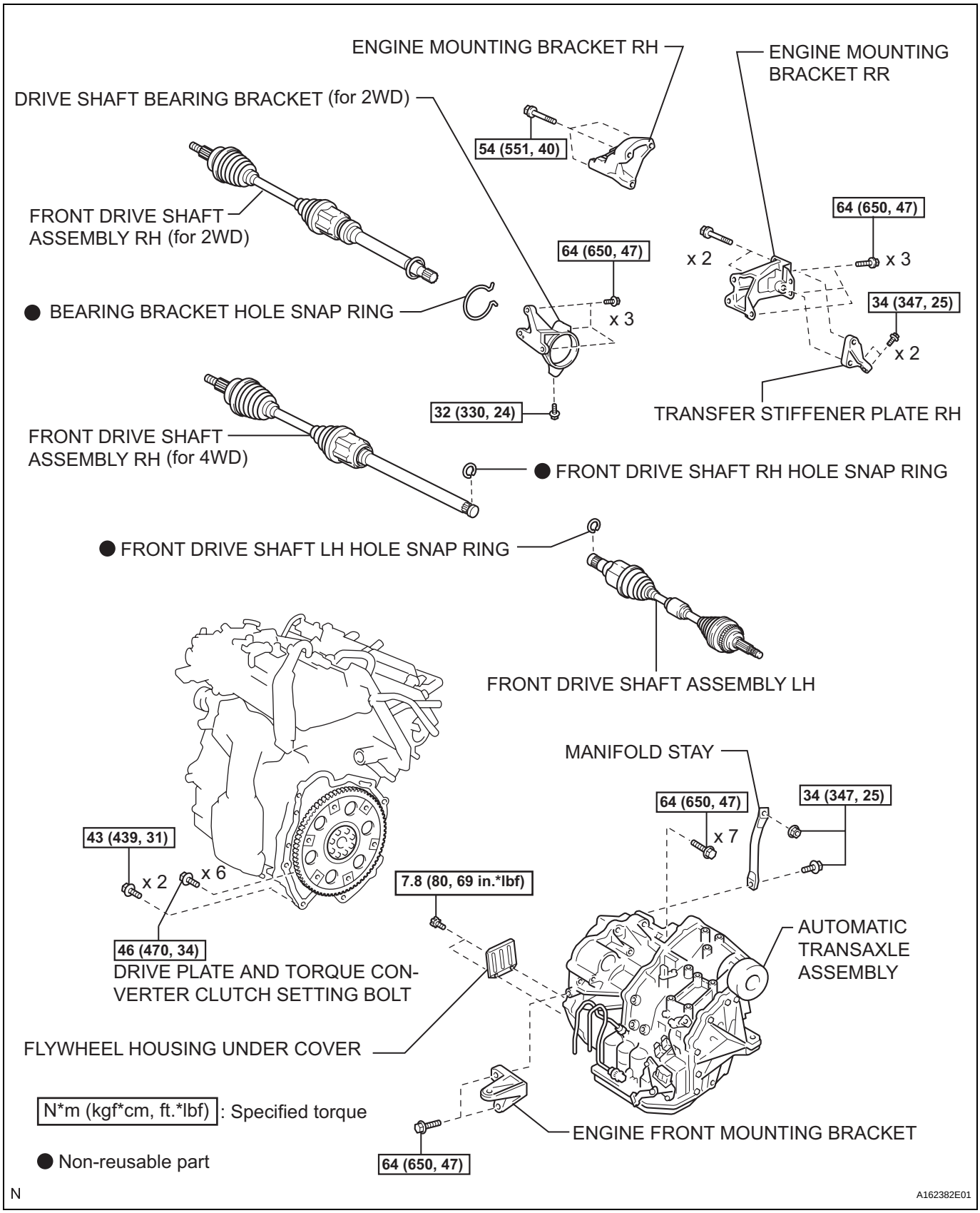
ENGINE MOUNTING BRACKET RH
ENGINE MOUNTING BRACKET RR
DRIVE SHAFT BEARING BRACKET (for 2WD)
54 (551, 40)
FRONT DRIVE SHAFT ASSEMBLY RH (for 2WD)
64 (650, 47)
x 2
x 3
64 (650, 47)
x 3
● BEARING BRACKET HOLE SNAP RING
34 (347, 25)
x 2
32 (330, 24)
TRANSFER STIFFENER PLATE RH
FRONT DRIVE SHAFT ASSEMBLY RH (for 4WD)
● FRONT DRIVE SHAFT RH HOLE SNAP RING
● FRONT DRIVE SHAFT LH HOLE SNAP RING
FRONT DRIVE SHAFT ASSEMBLY LH
MANIFOLD STAY
64 (650, 47)
x 7
34 (347, 25)
43 (439, 31)
x 2
x 6
7.8 (80, 69 in.*lbf)
AUTOMATIC TRANSAXLE ASSEMBLY
46 (470, 34)
DRIVE PLATE AND TORQUE CONVERTER CLUTCH SETTING BOLT
FLYWHEEL HOUSING UNDER COVER
N*m (kgf*cm, ft.*lbf) : Specified torque
● Non-reusable part
ENGINE FRONT MOUNTING BRACKET
64 (650, 47)
N
A162382E01

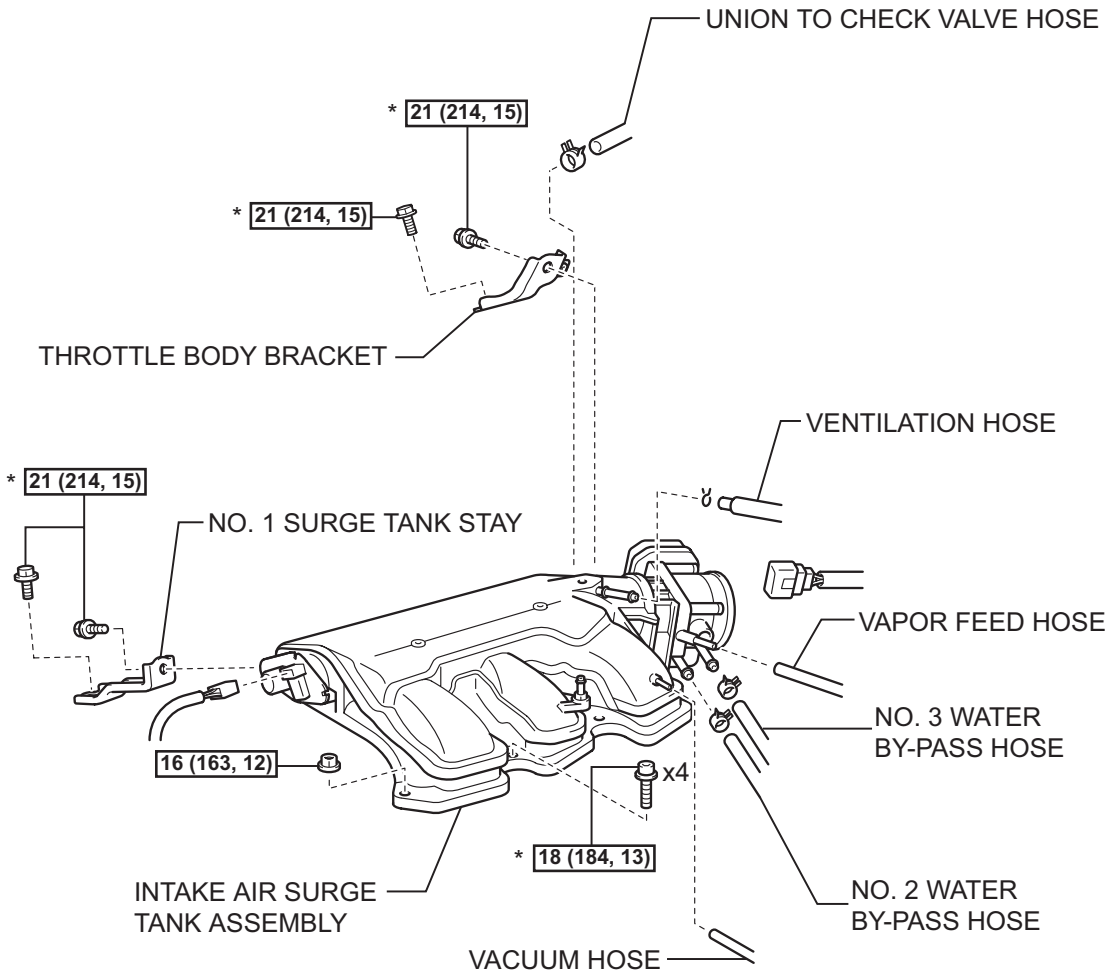

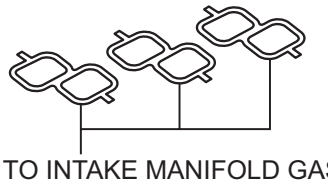

● AIR SURGE TANK TO INTAKE MANIFOLD GASKET

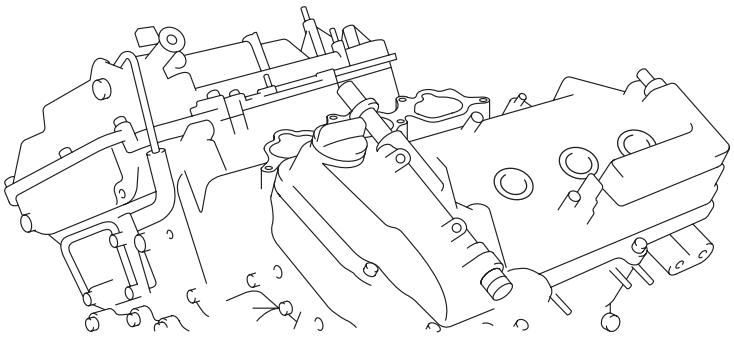

N*m (kgf*cm, ft.*lbf): Specified torque

● Non-reusable part

* DO NOT apply oil

A139213E02

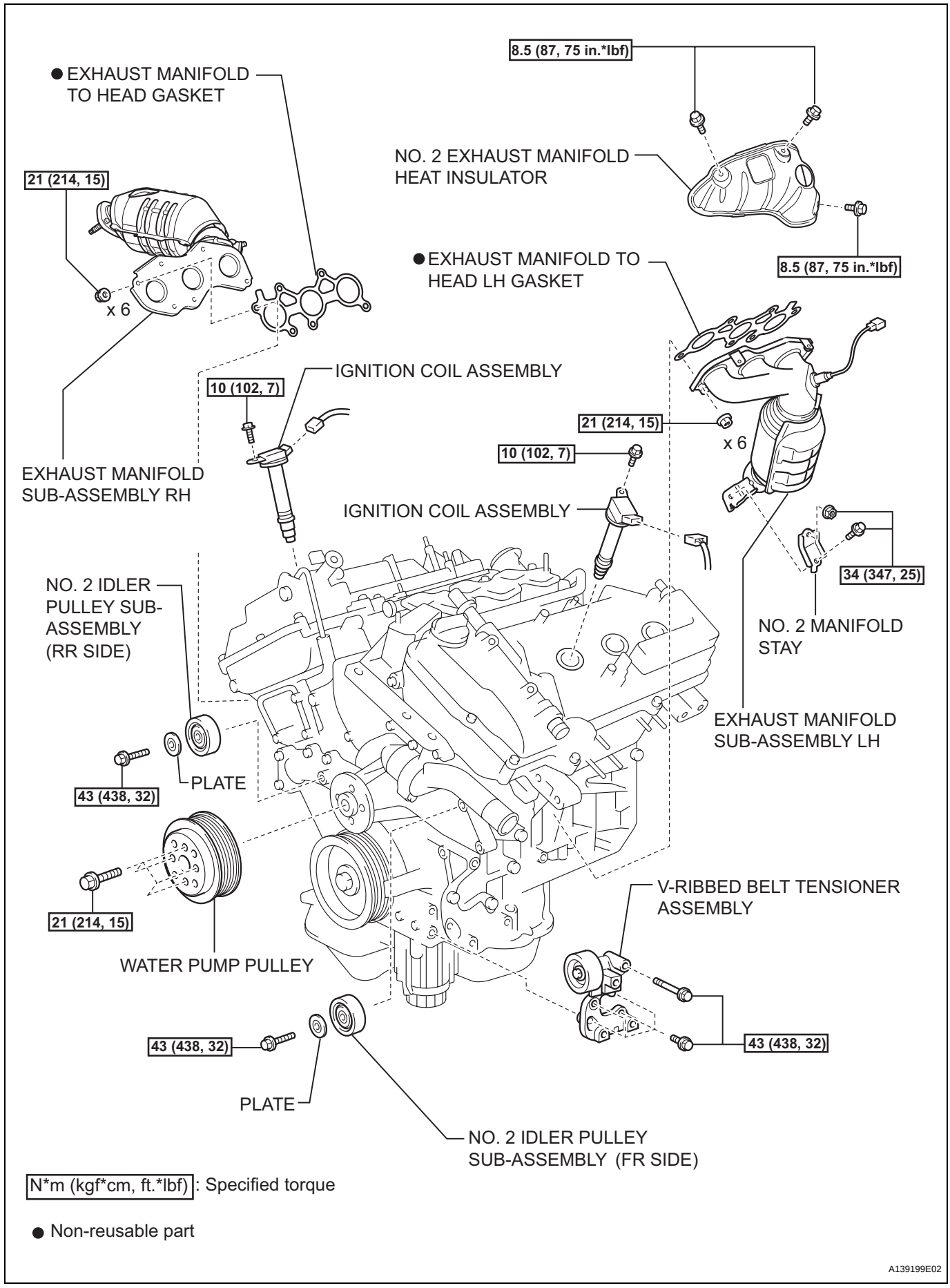

N*m (kgf*cm, ft.*lbf): Specified torque

● Non-reusable part

A139199E02

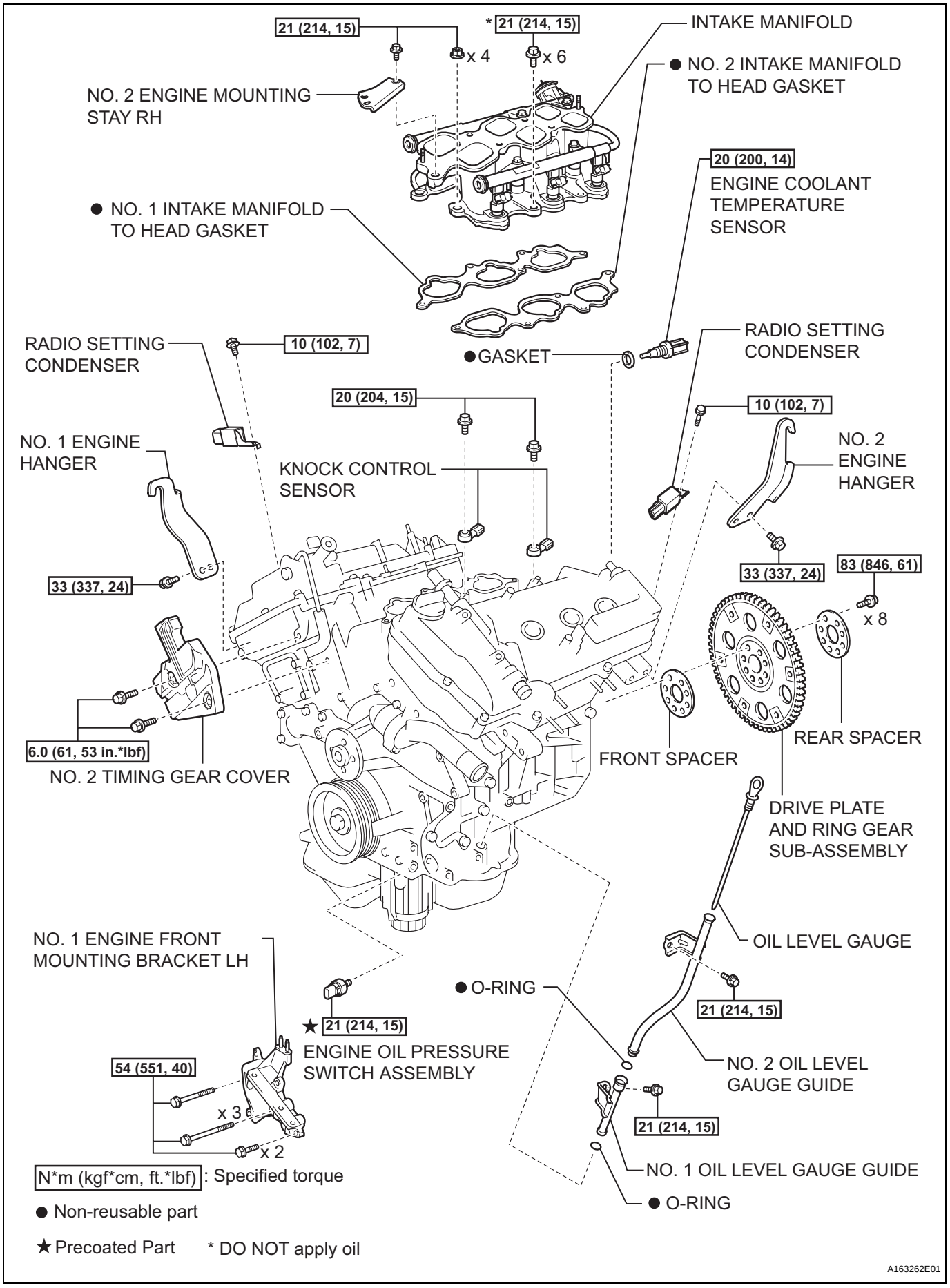
21 (214, 15)
* 21 (214, 15)
x 4
x 6
INTAKE MANIFOLD
NO. 2 ENGINE MOUNTING STAY RH
● NO. 2 INTAKE MANIFOLD TO HEAD GASKET
20 (200, 14)
ENGINE COOLANT TEMPERATURE SENSOR
● NO. 1 INTAKE MANIFOLD TO HEAD GASKET
RADIO SETTING CONDENSER
10 (102, 7)
●GASKET
RADIO SETTING CONDENSER
20 (204, 15)
10 (102, 7)
NO. 1 ENGINE HANGER
KNOCK CONTROL SENSOR
NO. 2 ENGINE HANGER
33 (337, 24)
33 (337, 24)
83 (846, 61)
x 8
6.0 (61, 53 in.*lbf)
NO. 2 TIMING GEAR COVER
FRONT SPACER
REAR SPACER
DRIVE PLATE AND RING GEAR SUB-ASSEMBLY
NO. 1 ENGINE FRONT MOUNTING BRACKET LH
OIL LEVEL GAUGE
● O-RING
21 (214, 15)
★ 21 (214, 15)
ENGINE OIL PRESSURE SWITCH ASSEMBLY
54 (551, 40)
x 3
x 2
NO. 2 OIL LEVEL GAUGE GUIDE
21 (214, 15)
NO. 1 OIL LEVEL GAUGE GUIDE
● O-RING
N*m (kgf*cm, ft.*lbf): Specified torque
● Non-reusable part
★ Precoated Part
* DO NOT apply oil
A163262E01