ENGINE UNIT

COMPONENTS

Bank 1:

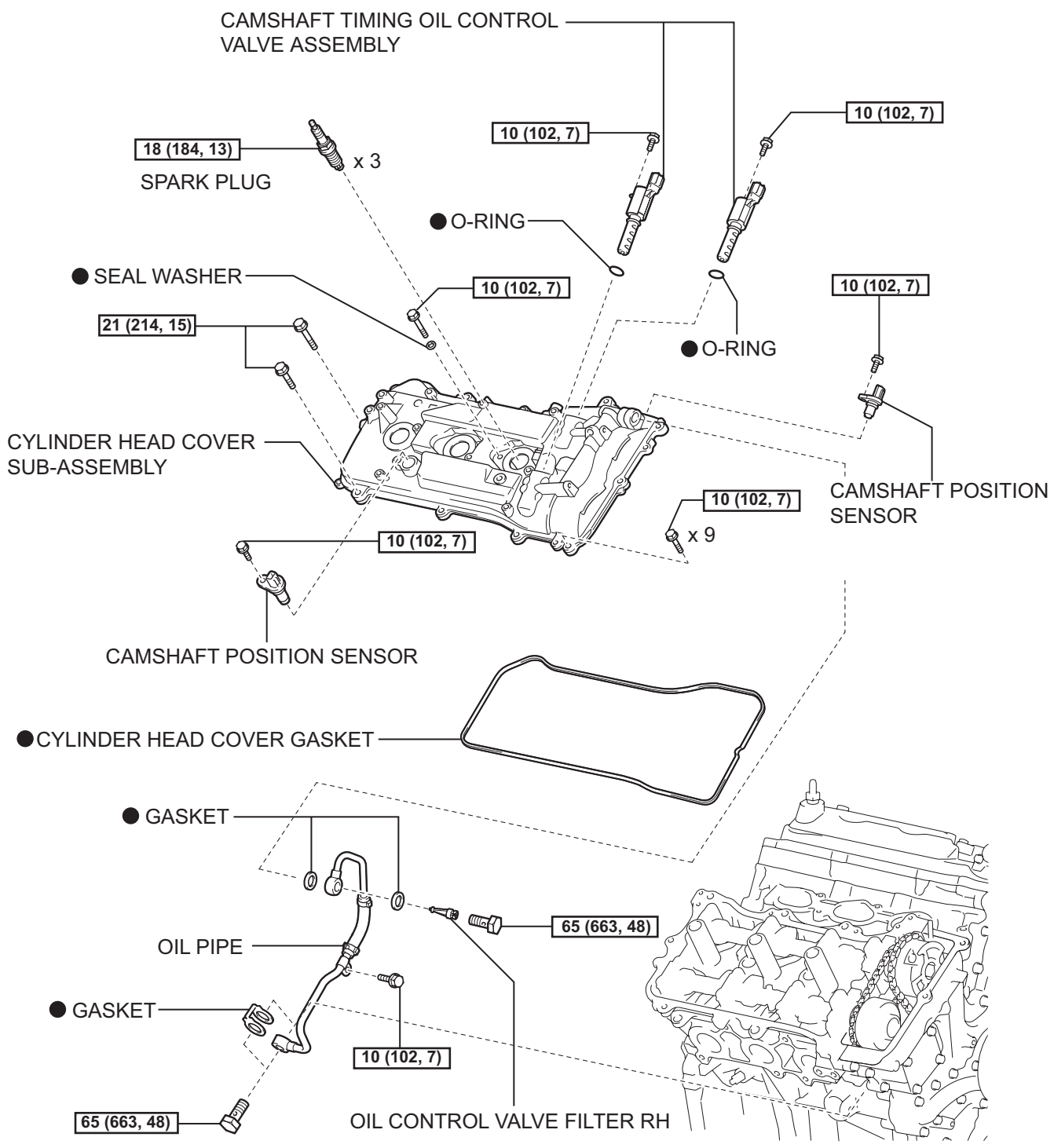

N*m (kgf*cm, ft.*lbf): Specified torque ● Non-reusable part

P

A132493E08

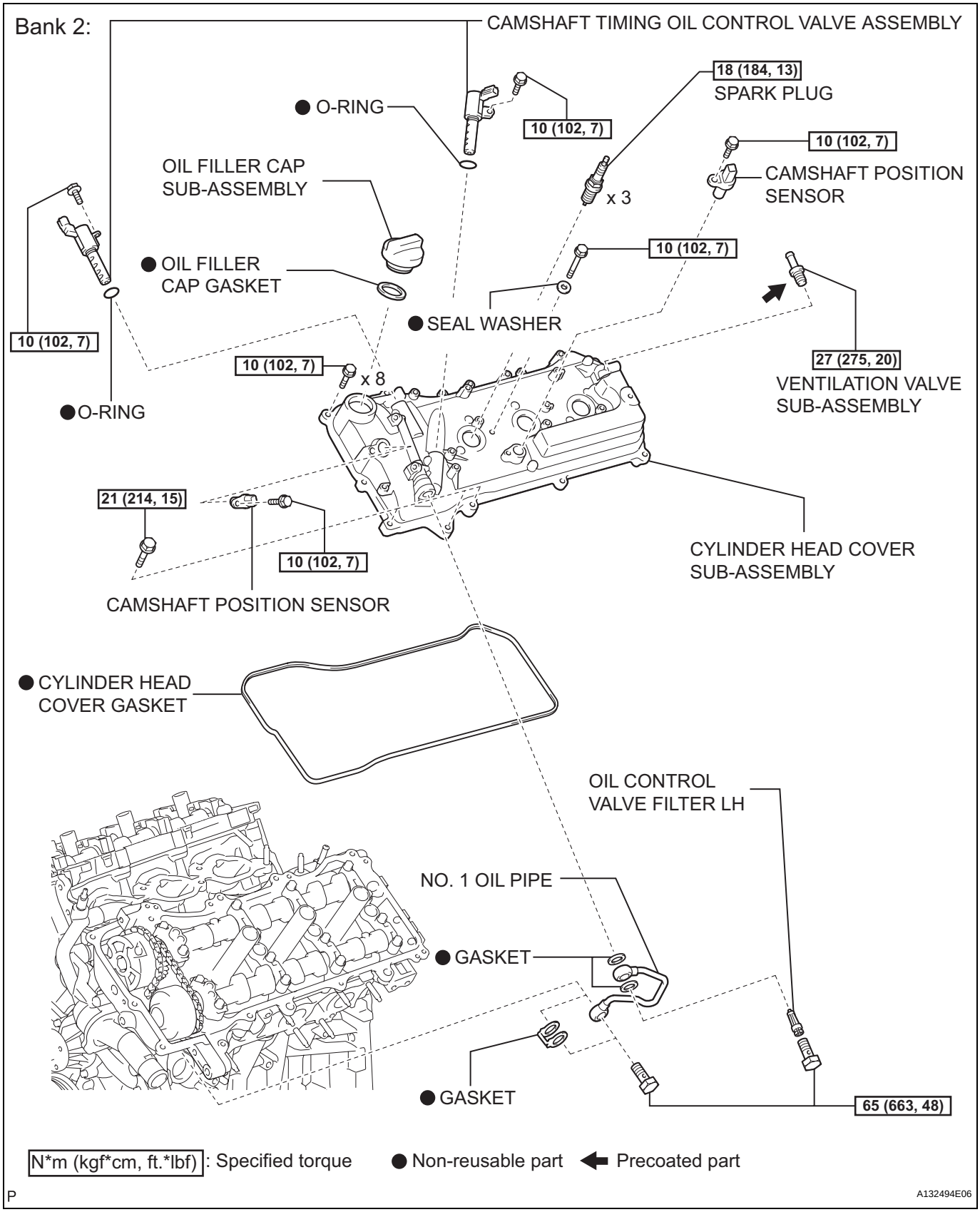
Bank 2:
CAMSHAFT TIMING OIL CONTROL VALVE ASSEMBLY
● O-RING
10 (102, 7)
18 (184, 13)
SPARK PLUG
10 (102, 7)
CAMSHAFT POSITION SENSOR
x 3
OIL FILLER CAP SUB-ASSEMBLY
● OIL FILLER CAP GASKET
10 (102, 7)
● SEAL WASHER
10 (102, 7)
10 (102, 7)
x 8
27 (275, 20)
VENTILATION VALVE SUB-ASSEMBLY
● O-RING
21 (214, 15)
10 (102, 7)
CAMSHAFT POSITION SENSOR
CYLINDER HEAD COVER SUB-ASSEMBLY
● CYLINDER HEAD COVER GASKET
OIL CONTROL VALVE FILTER LH
NO. 1 OIL PIPE
● GASKET
● GASKET
65 (663, 48)
N*m (kgf*cm, ft.*lbf): Specified torque
● Non-reusable part
Precoated part
P
A132494E06

EM

EM

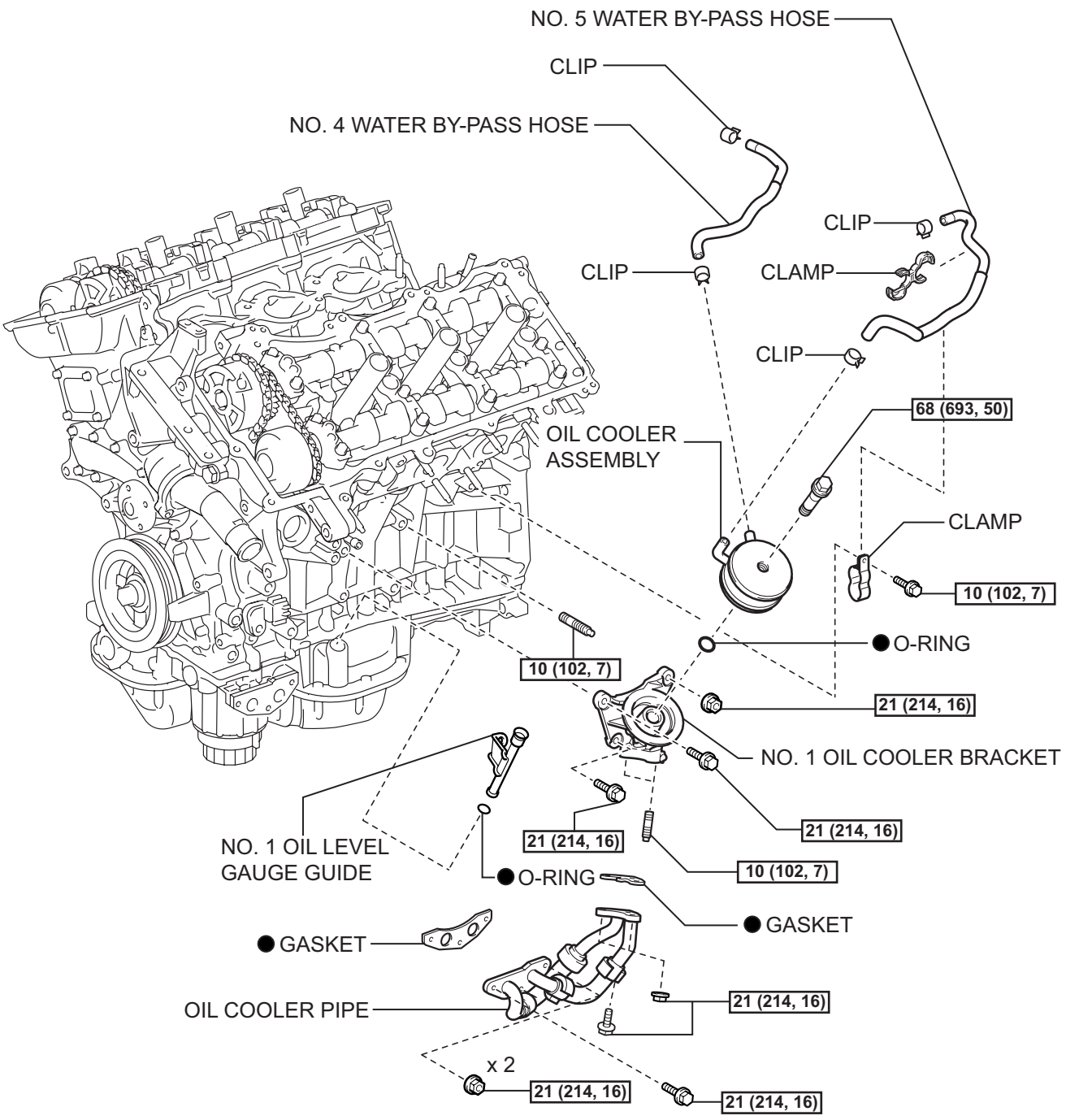

N*m (kgf*cm, ft.*lbf): Specified torque ● Non-reusable part

A136269E04

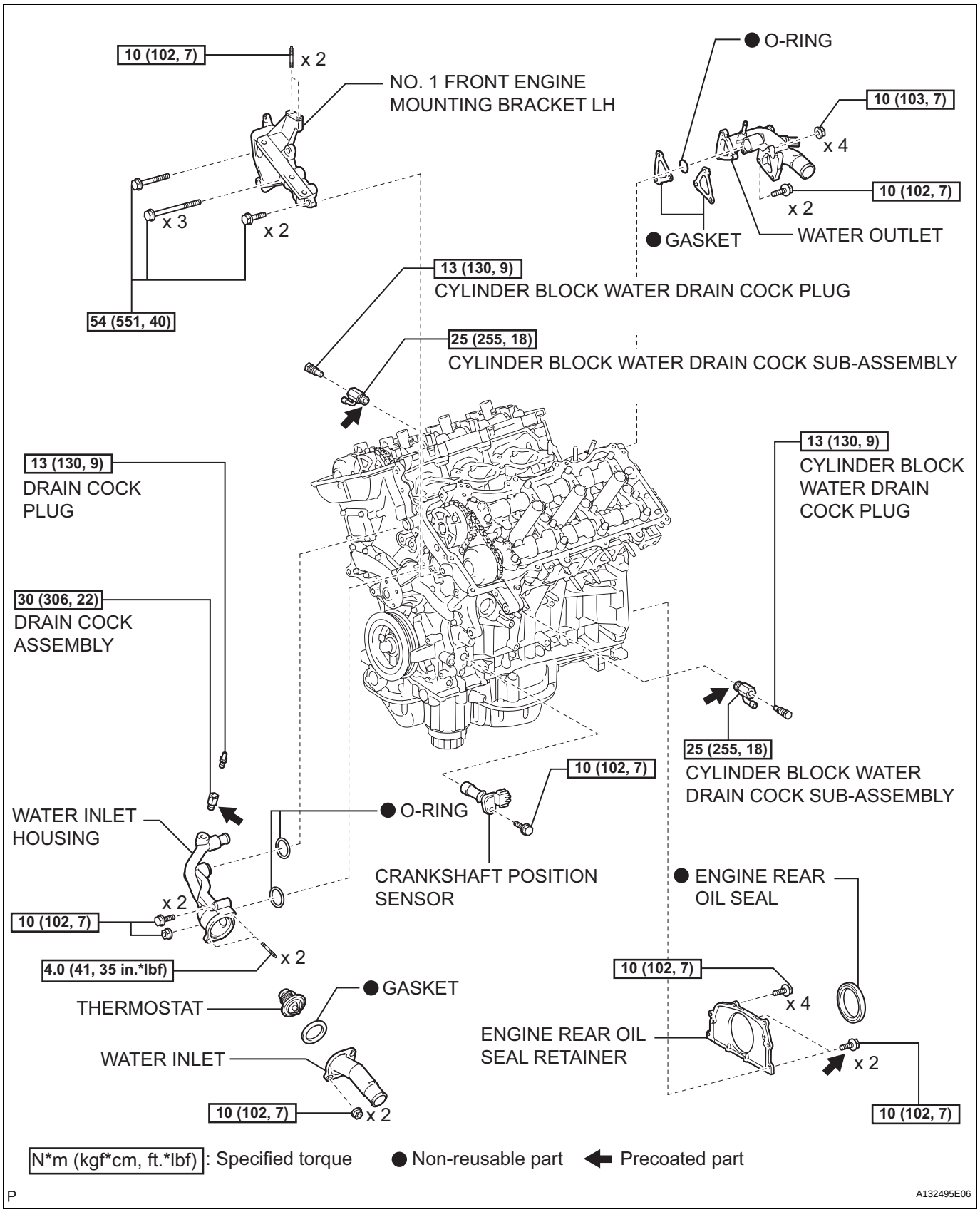
10 (102, 7)
x 2
NO. 1 FRONT ENGINE MOUNTING BRACKET LH
x 3
x 2
54 (551, 40)
O-RING
10 (103, 7)
x 4
10 (102, 7)
x 2
GASKET
WATER OUTLET
13 (130, 9)
CYLINDER BLOCK WATER DRAIN COCK PLUG
25 (255, 18)
CYLINDER BLOCK WATER DRAIN COCK SUB-ASSEMBLY
13 (130, 9)
DRAIN COCK PLUG
30 (306, 22)
DRAIN COCK ASSEMBLY
13 (130, 9)
CYLINDER BLOCK WATER DRAIN COCK PLUG
25 (255, 18)
CYLINDER BLOCK WATER DRAIN COCK SUB-ASSEMBLY
10 (102, 7)
O-RING
WATER INLET HOUSING
x 2
10 (102, 7)
x 2
4.0 (41, 35 in.*lbf)
CRANKSHAFT POSITION SENSOR
ENGINE REAR OIL SEAL
10 (102, 7)
x 4
GASKET
THERMOSTAT
WATER INLET
ENGINE REAR OIL SEAL RETAINER
x 2
10 (102, 7)
x 2
10 (102, 7)
N*m (kgf*cm, ft.*lbf): Specified torque
Non-reusable part
Precoated part
P
A132495E06

EM

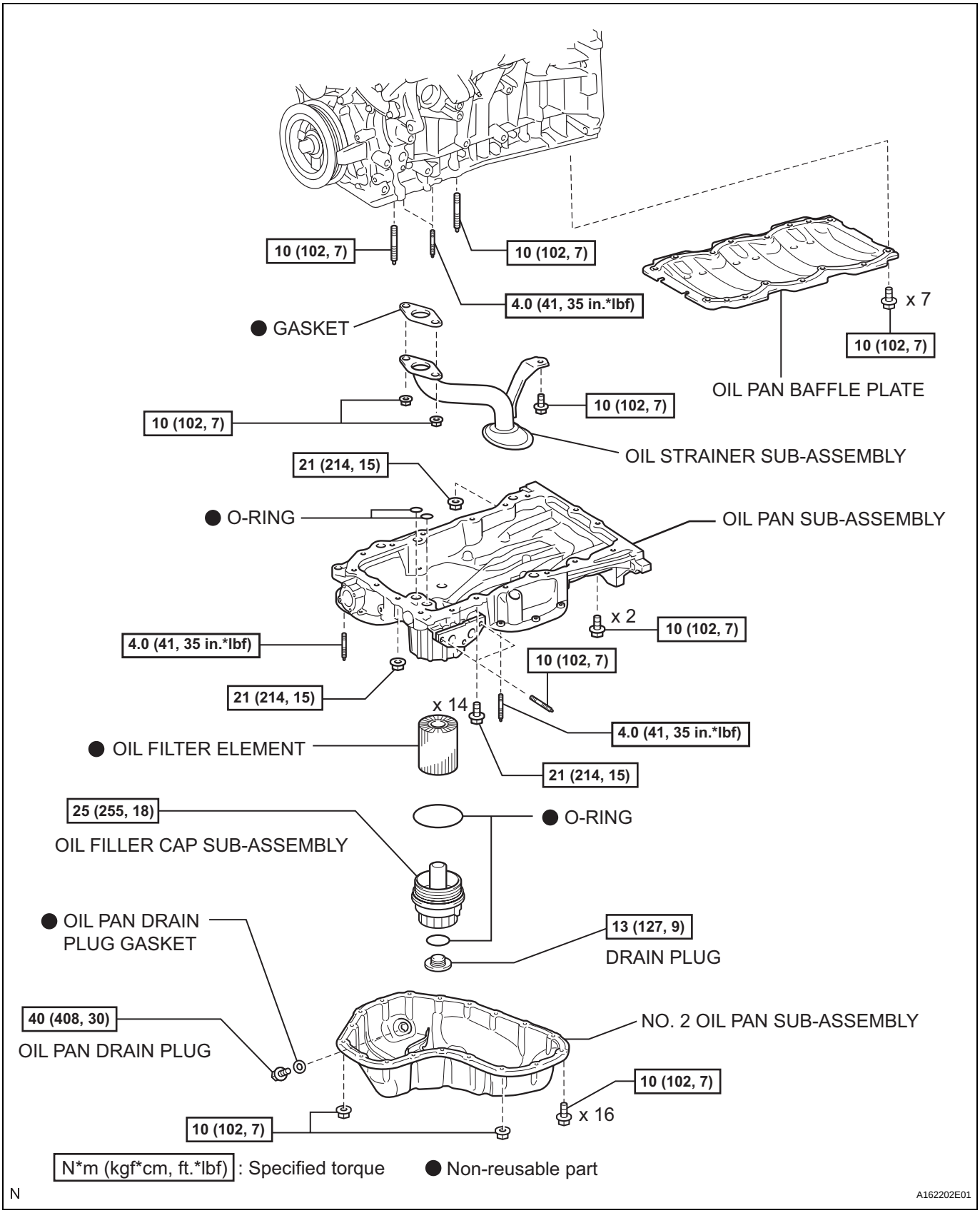
10 (102, 7)
10 (102, 7)
4.0 (41, 35 in.*lbf)
● GASKET
x 7
10 (102, 7)
OIL PAN BAFFLE PLATE
10 (102, 7)
10 (102, 7)
OIL STRAINER SUB-ASSEMBLY
21 (214, 15)
● O-RING
OIL PAN SUB-ASSEMBLY
x 2
10 (102, 7)
4.0 (41, 35 in.*lbf)
10 (102, 7)
21 (214, 15)
x 14
4.0 (41, 35 in.*lbf)
● OIL FILTER ELEMENT
21 (214, 15)
25 (255, 18)
● O-RING
OIL FILLER CAP SUB-ASSEMBLY
● OIL PAN DRAIN PLUG GASKET
13 (127, 9)
DRAIN PLUG
40 (408, 30)
OIL PAN DRAIN PLUG
NO. 2 OIL PAN SUB-ASSEMBLY
10 (102, 7)
x 16
10 (102, 7)
N*m (kgf*cm, ft.*lbf) : Specified torque
● Non-reusable part
N
A162202E01

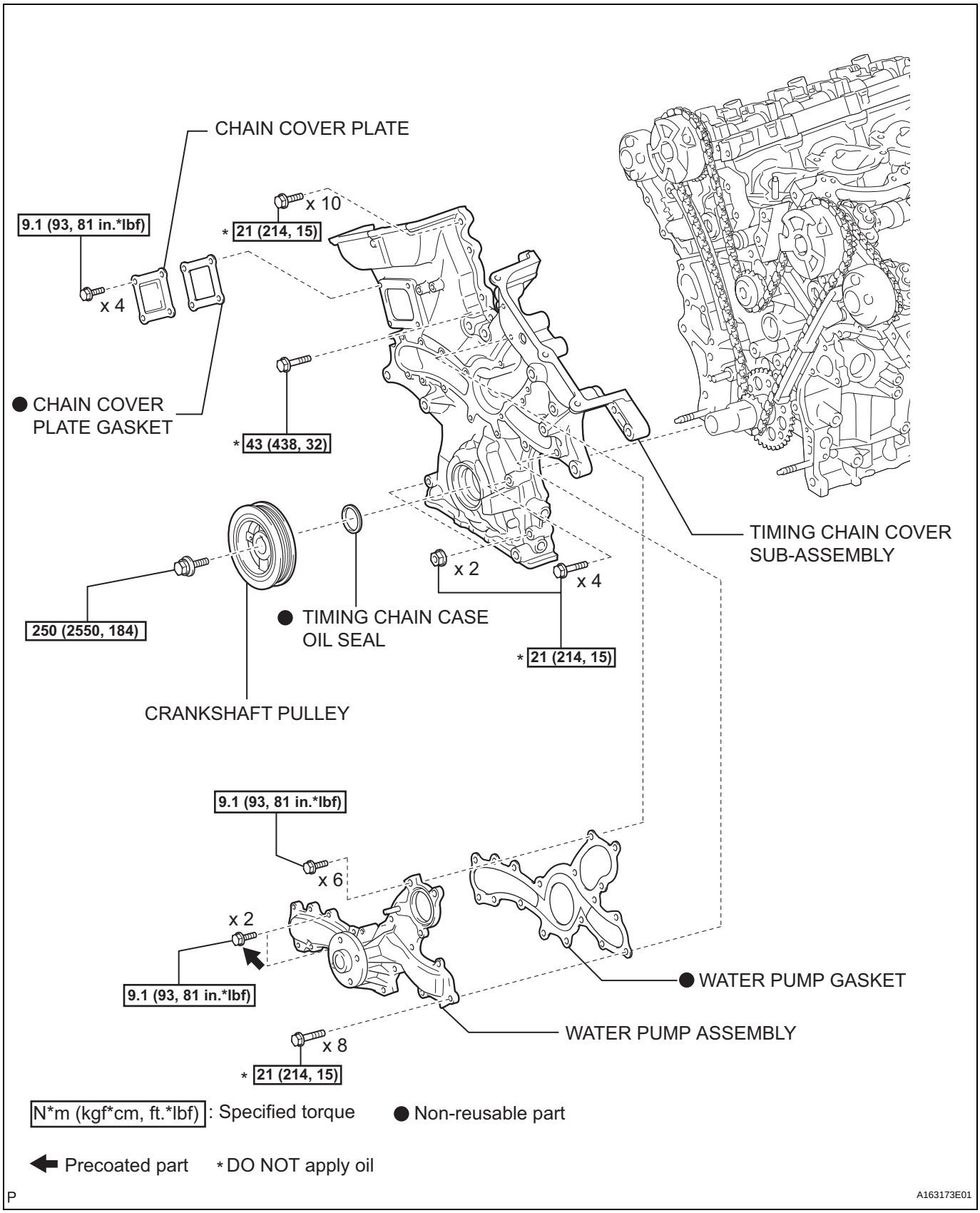
CHAIN COVER PLATE
9.1 (93, 81 in.*lbf)
x 4
x 10
* 21 (214, 15)
● CHAIN COVER PLATE GASKET
* 43 (438, 32)
TIMING CHAIN COVER SUB-ASSEMBLY
x 2
x 4
250 (2550, 184)
● TIMING CHAIN CASE OIL SEAL
* 21 (214, 15)
CRANKSHAFT PULLEY
9.1 (93, 81 in.*lbf)
x 6
x 2
9.1 (93, 81 in.*lbf)
● WATER PUMP GASKET
WATER PUMP ASSEMBLY
x 8
* 21 (214, 15)
N*m (kgf*cm, ft.*lbf) : Specified torque
● Non-reusable part
Precoated part
* DO NOT apply oil
P
A163173E01

EM

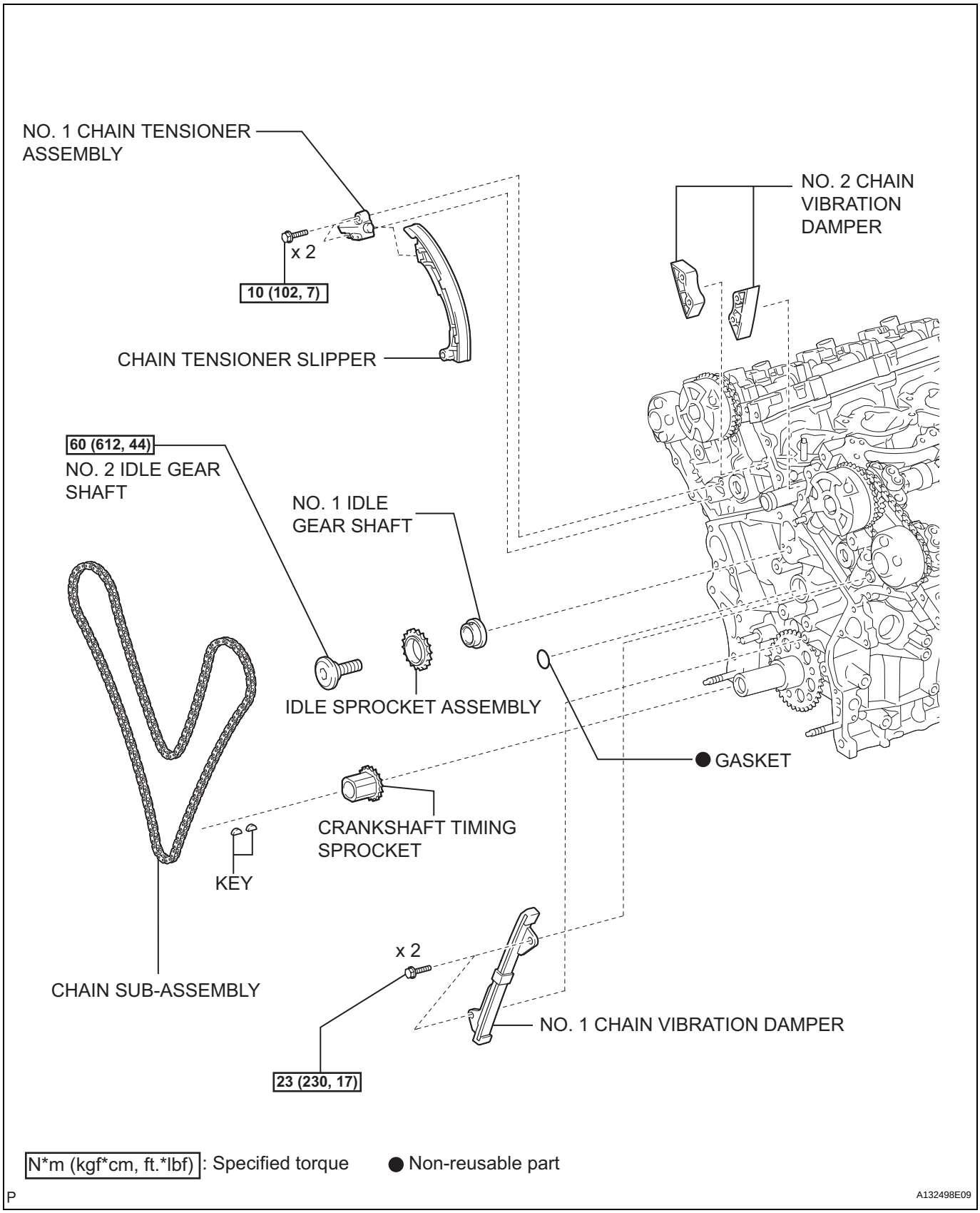

EM

N*m (kgf*cm, ft.*lbf): Specified torque ● Non-reusable part

P

A132498E09

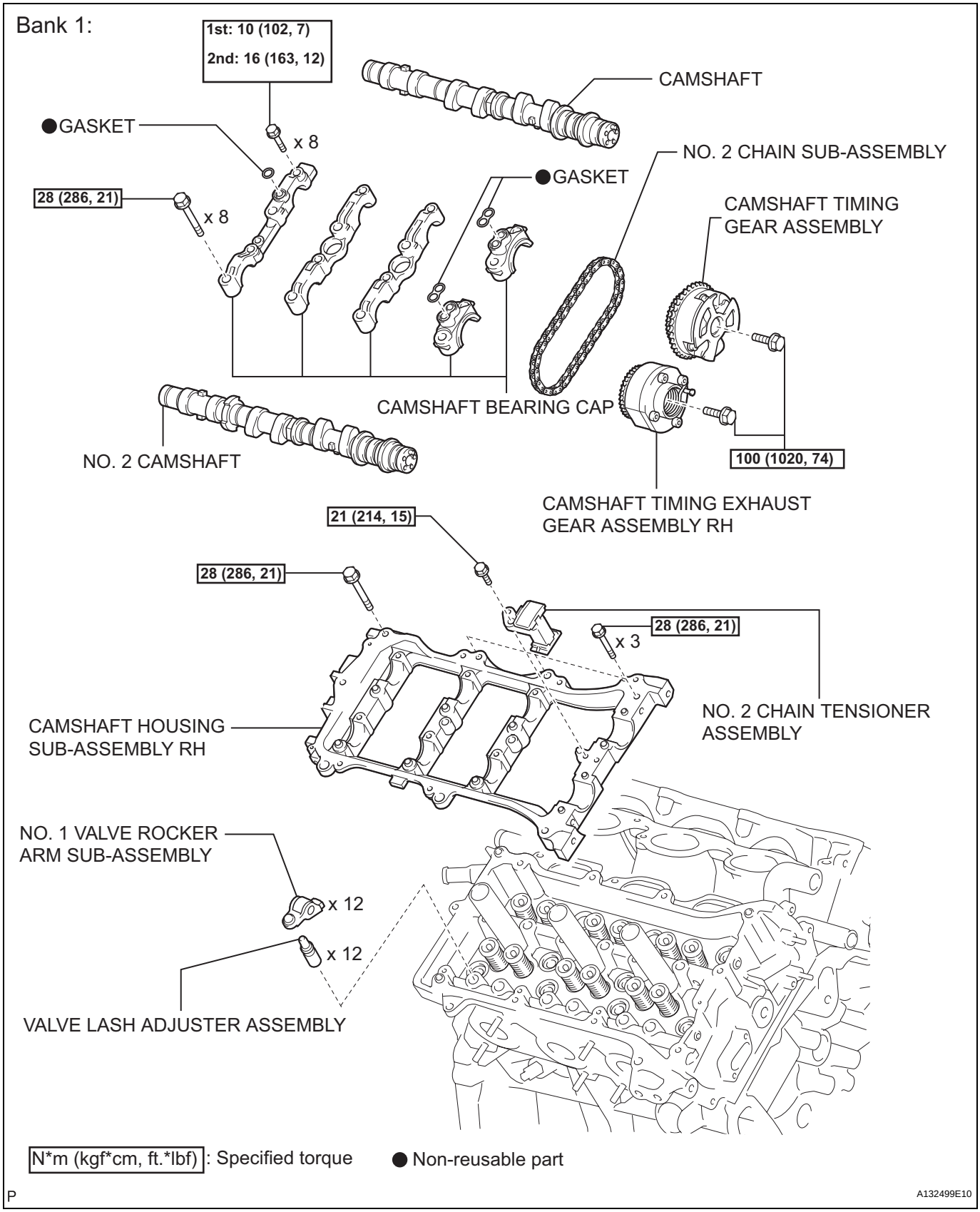
Bank 1:
1st: 10 (102, 7)
2nd: 16 (163, 12)
CAMSHAFT
GASKET
x 8
NO. 2 CHAIN SUB-ASSEMBLY
GASKET
28 (286, 21)
x 8
CAMSHAFT TIMING GEAR ASSEMBLY
CAMSHAFT BEARING CAP
NO. 2 CAMSHAFT
100 (1020, 74)
CAMSHAFT TIMING EXHAUST GEAR ASSEMBLY RH
21 (214, 15)
28 (286, 21)
28 (286, 21)
x 3
NO. 2 CHAIN TENSIONER ASSEMBLY
CAMSHAFT HOUSING SUB-ASSEMBLY RH
NO. 1 VALVE ROCKER ARM SUB-ASSEMBLY
x 12
x 12
VALVE LASH ADJUSTER ASSEMBLY
N*m (kgf*cm, ft.*lbf): Specified torque
Non-reusable part
P
A132499E10

EM

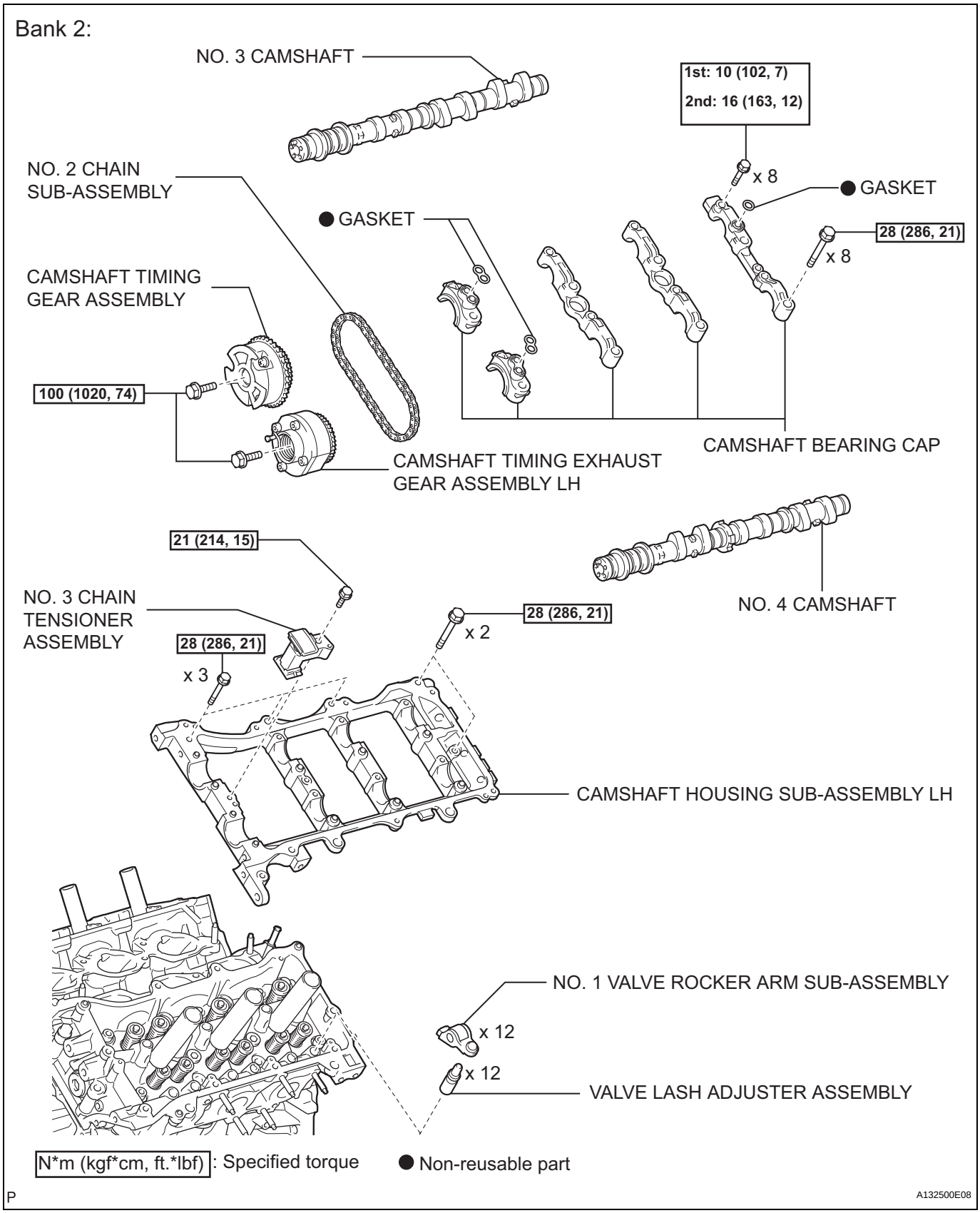
Bank 2:
NO. 3 CAMSHAFT
1st: 10 (102, 7)
2nd: 16 (163, 12)
x 8
GASKET
NO. 2 CHAIN SUB-ASSEMBLY
GASKET
28 (286, 21)
x 8
CAMSHAFT TIMING GEAR ASSEMBLY
100 (1020, 74)
CAMSHAFT BEARING CAP
CAMSHAFT TIMING EXHAUST GEAR ASSEMBLY LH
21 (214, 15)
NO. 4 CAMSHAFT
NO. 3 CHAIN TENSIONER ASSEMBLY
28 (286, 21)
x 2
28 (286, 21)
x 3
CAMSHAFT HOUSING SUB-ASSEMBLY LH
NO. 1 VALVE ROCKER ARM SUB-ASSEMBLY
x 12
x 12
VALVE LASH ADJUSTER ASSEMBLY
N*m (kgf*cm, ft.*lbf): Specified torque
Non-reusable part
A132500E08

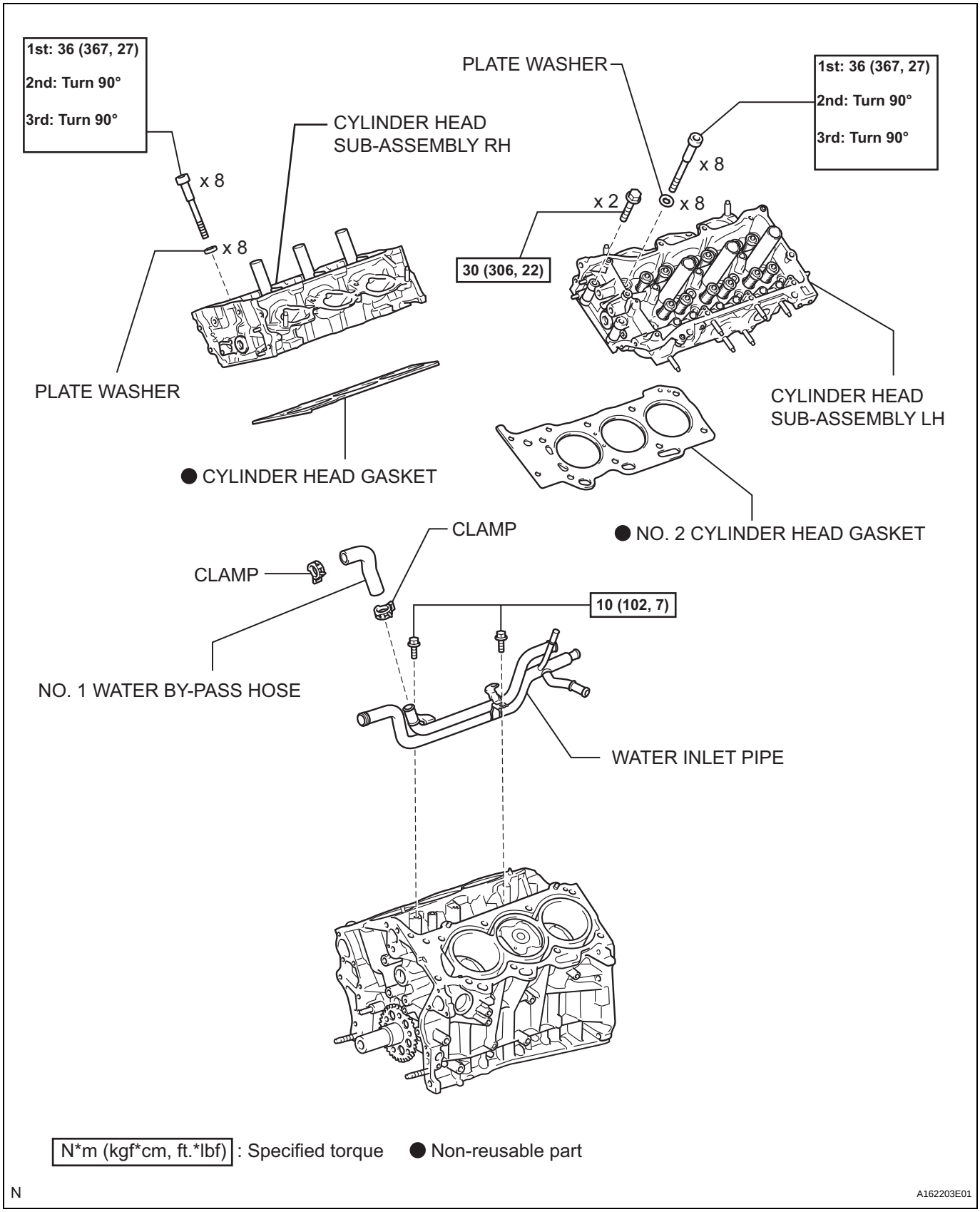

N

A162203E01

EM

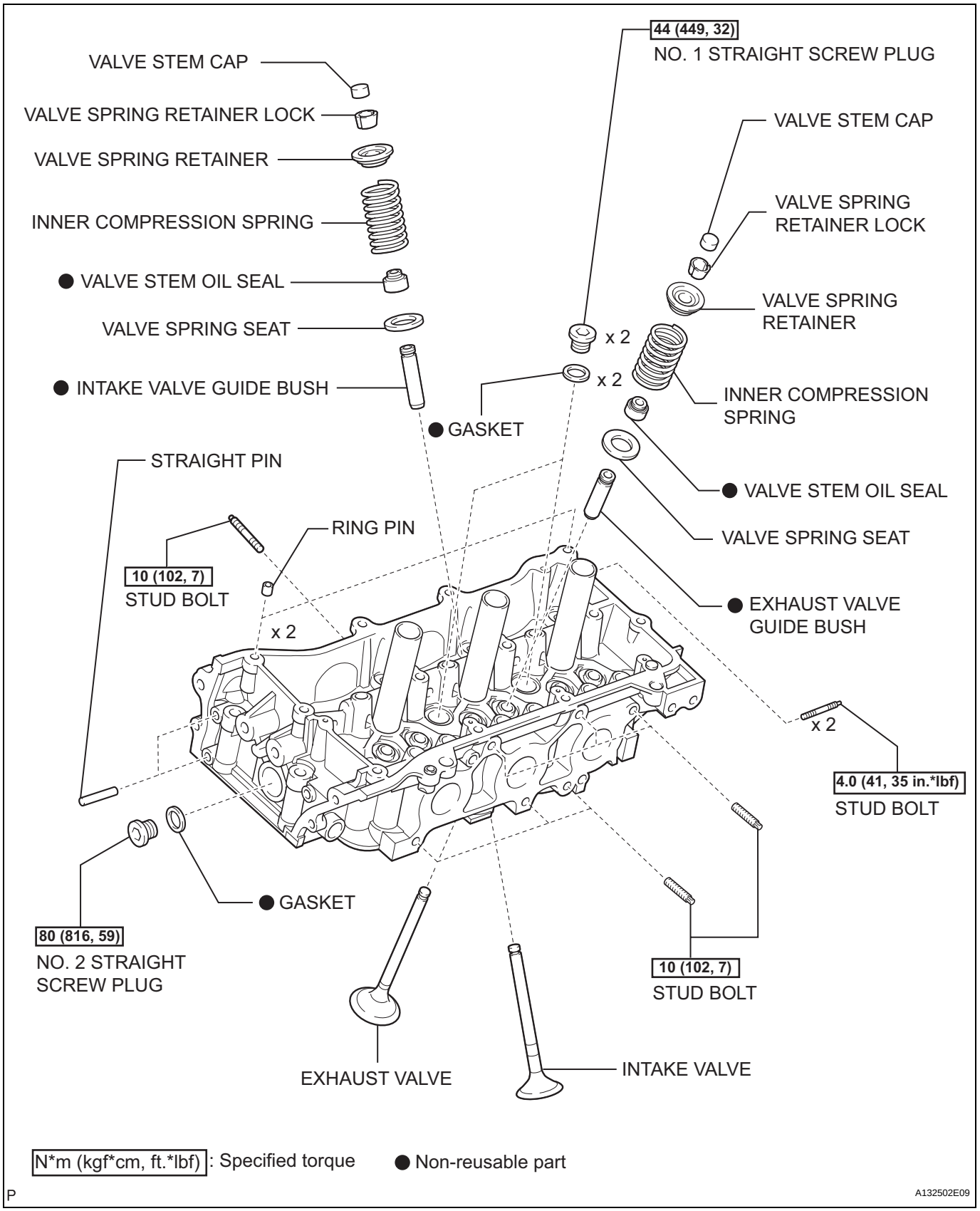
VALVE STEM CAP
VALVE SPRING RETAINER LOCK
VALVE SPRING RETAINER
INNER COMPRESSION SPRING
● VALVE STEM OIL SEAL
VALVE SPRING SEAT
● INTAKE VALVE GUIDE BUSH
44 (449, 32)
NO. 1 STRAIGHT SCREW PLUG
VALVE STEM CAP
VALVE SPRING RETAINER LOCK
VALVE SPRING RETAINER
x 2
x 2
INNER COMPRESSION SPRING
● GASKET
STRAIGHT PIN
● VALVE STEM OIL SEAL
RING PIN
VALVE SPRING SEAT
10 (102, 7)
STUD BOLT
x 2
● EXHAUST VALVE GUIDE BUSH
x 2
4.0 (41, 35 in.*lbf)
STUD BOLT
● GASKET
80 (816, 59)
NO. 2 STRAIGHT SCREW PLUG
10 (102, 7)
STUD BOLT
EXHAUST VALVE
INTAKE VALVE
N*m (kgf*cm, ft.*lbf): Specified torque
● Non-reusable part
A132502E09

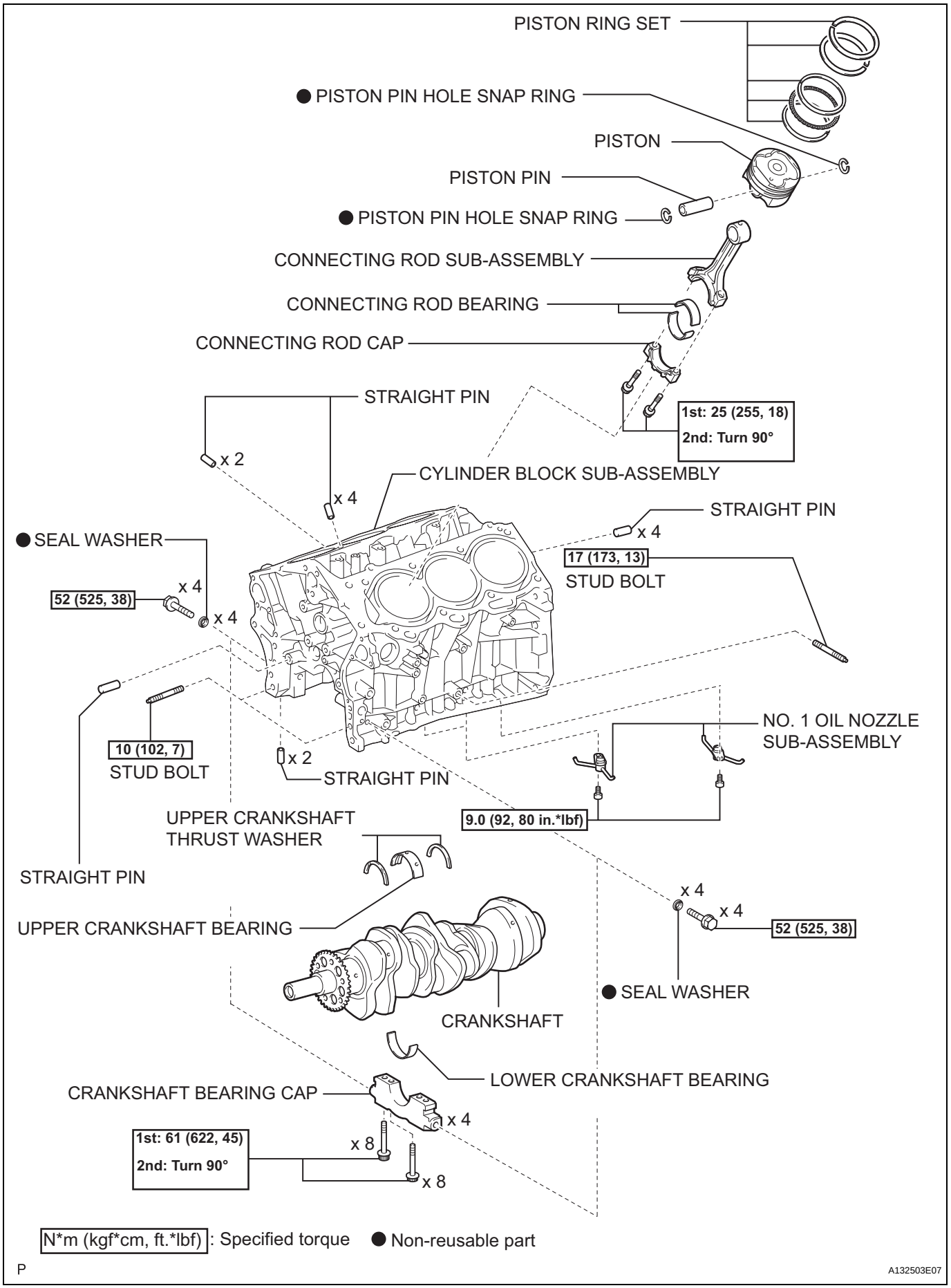
PISTON RING SET
● PISTON PIN HOLE SNAP RING
PISTON
PISTON PIN
● PISTON PIN HOLE SNAP RING
CONNECTING ROD SUB-ASSEMBLY
CONNECTING ROD BEARING
CONNECTING ROD CAP
1st: 25 (255, 18)
2nd: Turn 90°
STRAIGHT PIN
x 2
x 4
CYLINDER BLOCK SUB-ASSEMBLY
STRAIGHT PIN
x 4
● SEAL WASHER
17 (173, 13)
STUD BOLT
52 (525, 38)
x 4
x 4
10 (102, 7)
STUD BOLT
x 2
STRAIGHT PIN
NO. 1 OIL NOZZLE SUB-ASSEMBLY
9.0 (92, 80 in.*lbf)
UPPER CRANKSHAFT THRUST WASHER
STRAIGHT PIN
UPPER CRANKSHAFT BEARING
x 4
x 4
52 (525, 38)
● SEAL WASHER
CRANKSHAFT
LOWER CRANKSHAFT BEARING
CRANKSHAFT BEARING CAP
x 4
1st: 61 (622, 45)
2nd: Turn 90°
x 8
x 8
N*m (kgf*cm, ft.*lbf): Specified torque
● Non-reusable part
P
A132503E07