REMOVAL

1. **DISCHARGE FUEL SYSTEM PRESSURE**
   HINT:
   See page FU-1.
2. **DISCONNECT CABLE FROM NEGATIVE BATTERY TERMINAL**
3. **REMOVE NO. 1 ENGINE UNDER COVER**
4. **DRAIN ENGINE COOLANT (See page CO-6)**
5. **REMOVE FRONT WIPER ARM HEAD CAP (See page WW-4)**
6. **REMOVE FRONT WIPER ARM RH (See page WW-4)**
7. **REMOVE FRONT WIPER ARM LH (See page WW-4)**
8. **REMOVE COWL TOP VENTILATOR LOUVER SUB-ASSEMBLY (See page WW-4)**
9. **REMOVE WINDSHIELD WIPER MOTOR AND LINK ASSEMBLY (See page WW-4)**
10. **REMOVE NO. 1 COWL TOP TO COWL BRACE INNER**
    (a) Remove the 2 bolts and the No. 1 cowl top to cowl brace inner.

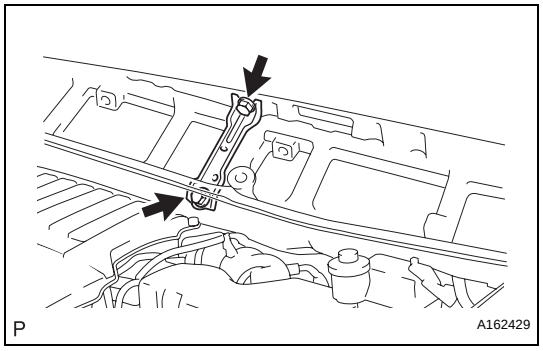

11. **REMOVE COWL TOP PANEL SUB-ASSEMBLY OUTER FRONT**
    (a) Remove the wire harness clamp.
    (b) Disconnect the fuel pump resistor connector.
    (c) Remove the 7 bolts and the cowl top panel outer front.
12. **REMOVE V-BANK COVER SUB-ASSEMBLY (See page EM-28)**

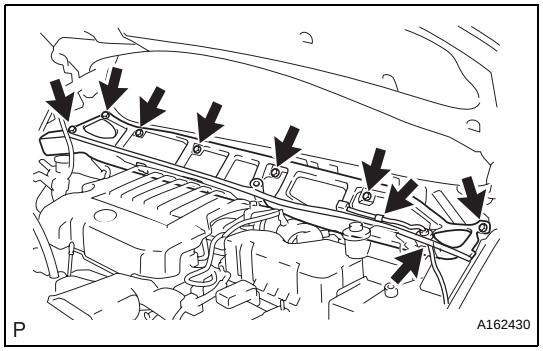

13. **REMOVE AIR CLEANER CAP SUB-ASSEMBLY**
    (a) Disconnect the 3 vacuum hoses.

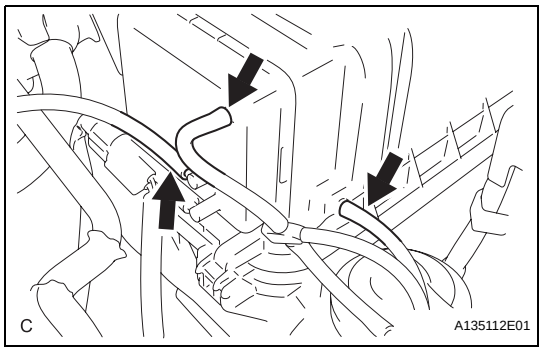

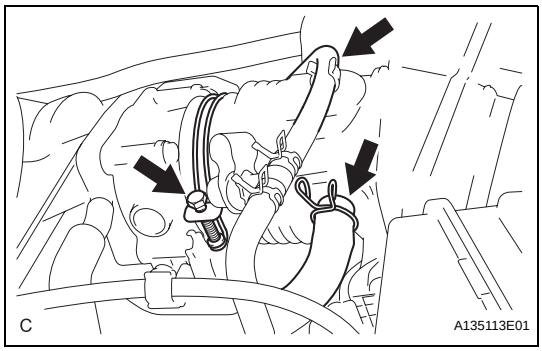

(b) Remove the No. 2 ventilation hose and air cleaner hose band.
(c) Disconnect the vacuum hose (EVAP) from the air cleaner hose.

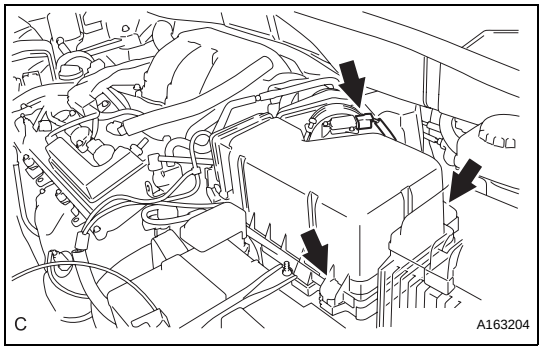

(d) Remove the 2 bolts and air cleaner cap sub-assembly.

14. REMOVE INTAKE AIR SURGE TANK ASSEMBLY

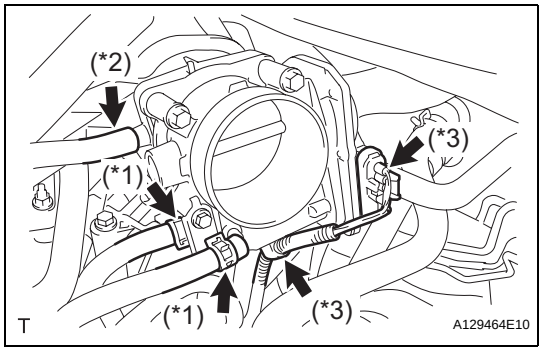

(a) Disconnect the 2 water by-pass hoses from the throttle with motor body assembly. (*1)
(b) Disconnect the fuel vapor feed hose assembly.(*2)
(c) Disconnect the throttle with motor body assembly connector and clamp. (*3)

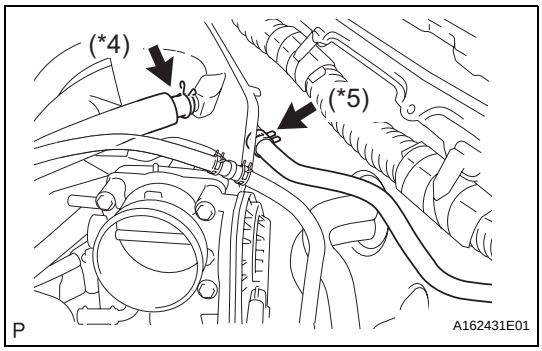

(d) Disconnect the No. 1 ventilation hose. (*4)
(e) Disconnect the union to check valve hose. (*5)

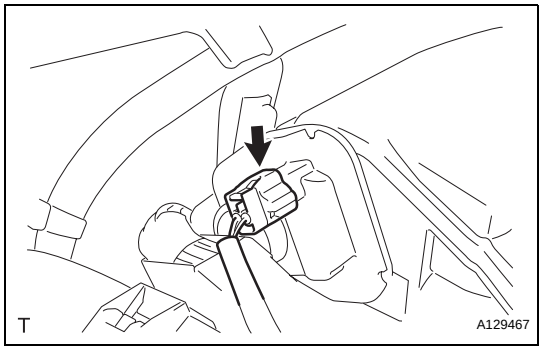

(f) Disconnect the connector.

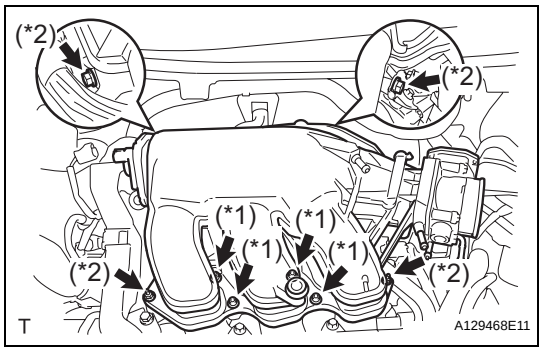

(g) Using a 5 mm socket hexagon wrench, remove the 4 bolts. (*1)
(h) Remove the 2 nuts, 2 bolts, and intake air surge tank. (*2)
(i) Remove the gasket from the intake air surge tank.

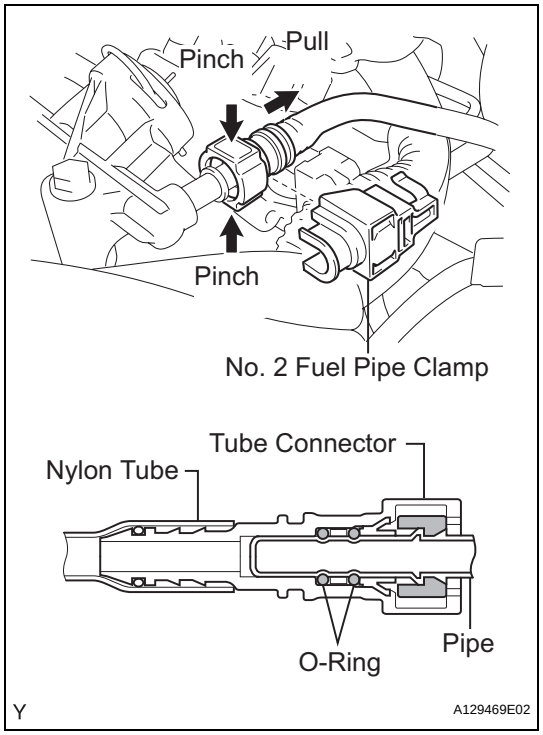

15. DISCONNECT FUEL TUBE SUB-ASSEMBLY

(a) Remove the No. 2 fuel pipe clamp.
(b) Pinch the tube connector and pull out the fuel pipe.
NOTICE:
- **Check that there is no dirt or other foreign objects around the connector before disconnecting it. Clean the connector as necessary.**
- **It is necessary to prevent mud or dirt from entering the quick connector. If mud or dirt gets in the connector, the O-rings may not seal properly.**
- **Only disconnect the quick connector by hand.**
- **Do not bend, kink or twist the nylon tubes. Protect the connector by covering it with a plastic bag.**
- **If the pipe and the connector are stuck, carefully try wiggling or pushing and pulling on the connector to release it. Pull the connector off the pipe carefully.**

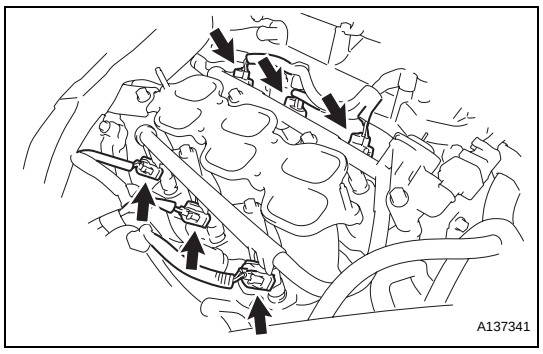

16. REMOVE FUEL INJECTOR ASSEMBLY

(a) Disconnect the 6 fuel injector connectors.

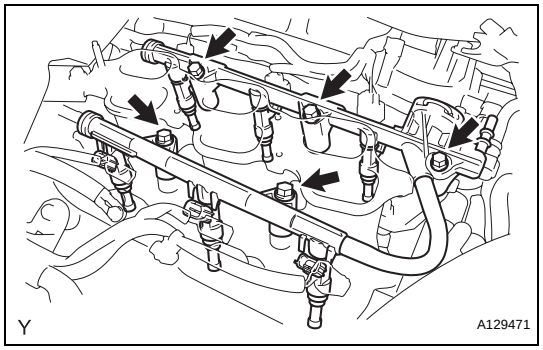

(b) Remove the 5 bolts and fuel delivery pipe sub-assembly together with the 6 fuel injectors.
NOTICE:
Be careful not to drop the fuel injectors when removing the fuel delivery pipe sub-assembly.

FU