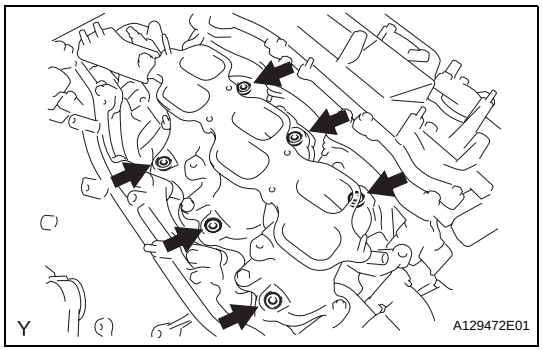

(c) Remove the 6 injector vibration insulators from the intake manifold.

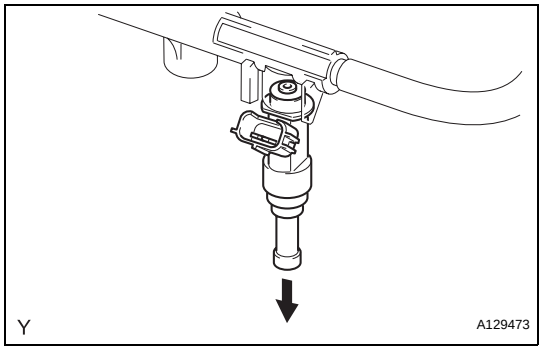

(d) Pull out the fuel injectors from the fuel delivery pipe sub-assembly.

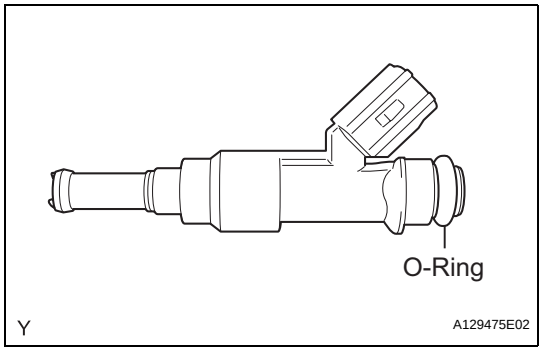

(e) Remove the 6 O-rings from the fuel injectors.

INSPECTION

1. INSPECT FUEL INJECTOR ASSEMBLY

(a) Inspect the injector resistance.

(1) Using an ohmmeter, measure the resistance between the terminals.

Standard resistance

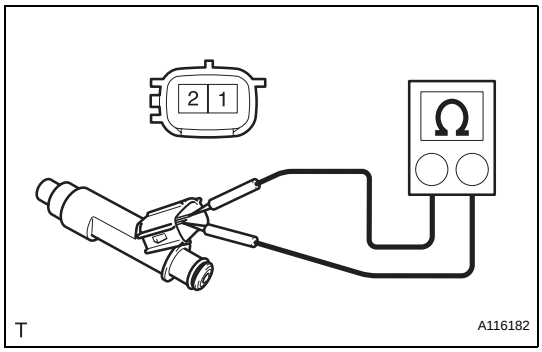

Tester Connection	Condition	Specified Condition
1-2	always	11.6 to 12.4 Ω at 20°C (68°F)

If the resistance is not as specified, replace the injector.

(b) Inspect the injection volume.

CAUTION:

This test involves high-pressure fuel and electricity. Take every precaution regarding the safe handling of both fuel and electricity. Perform this test in a safe area, and avoid any sparks or flames. Do not smoke.

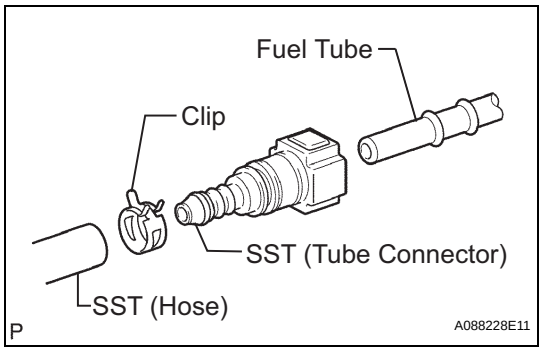

(1) Install the fuel tube connector to SST (hose), then connect the tube connector to the fuel pipe (vehicle side).
SST 09268-31011 (09268-41500, 90467-13001, 95336-08070)

(2) Install the O-ring to the fuel injector sub-assembly.

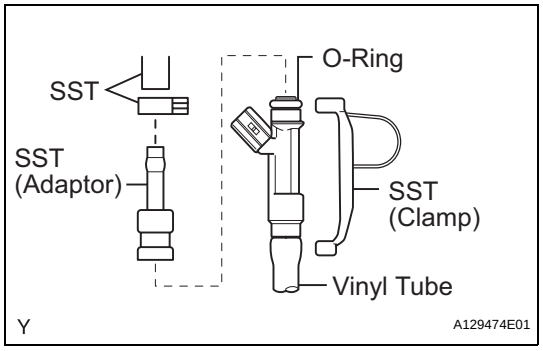

(3) Connect SST (adaptor and hose) to the injector, and hold the injector and union with SST (clamp).
SST 09268-31011 (90467-13001, 95336-08070), 09268-41140, 09268-41400

(4) Put the injector into the graduated cylinder.
CAUTION:
Install a suitable vinyl tube onto the injector to contain gasoline spray.

(5) Operate the fuel pump (See page FU-7).

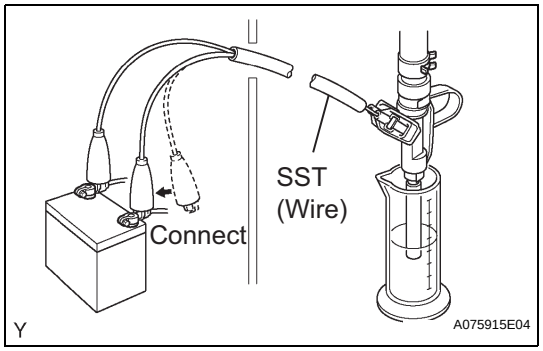

(6) Connect SST (wire) to the injector and the battery for 15 seconds, and measure the injection volume with the graduated cylinder. Test each injector 2 or 3 times.
SST 09842-30080
Volume:
84 to 100 cm^3 (5.1 to 6.0 cu in.) in 15 seconds
Difference between each injector:
16 cm^3 (0.98 cu in.) or less
If the injection volume is not as specified, replace the injector.

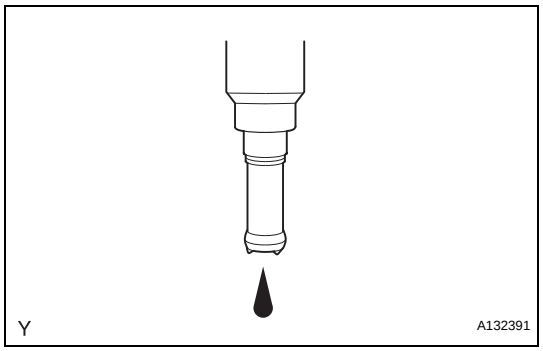

(c) Check for leakage.

(1) In the condition above, disconnect the tester probes of SST (wire) from the battery and check for fuel leakage from the injector.
Fuel drop:
1 drop or less in 16 minutes

FU

INSTALLATION

1. INSTALL FUEL INJECTOR ASSEMBLY

(a) Apply a light coat of spindle oil or gasoline to new O-rings, and install them to each injector.

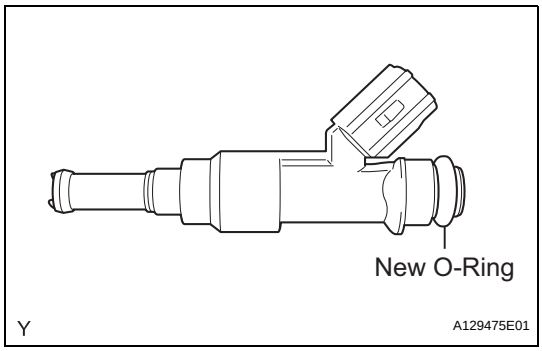

(b) Apply a light coat of spindle oil or gasoline where the fuel delivery pipe contacts the O-ring.

(c) Push the fuel injector while turning it to install the injector in the fuel delivery pipe.

(d) Position the fuel injector connector outward.

NOTICE:

- **Be careful not to twist the O-ring.**
- **After installing the fuel injector, check that it turns smoothly. If not, reinstall it with a new O-ring.**

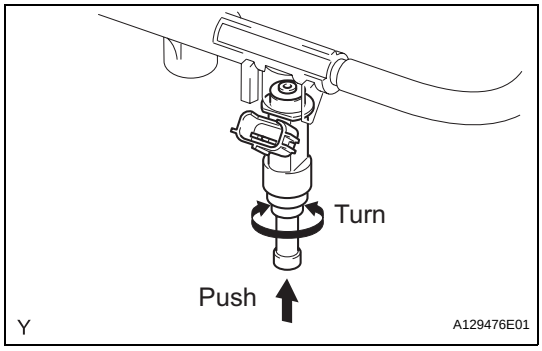

(e) Install 6 new insulators to the intake manifold.

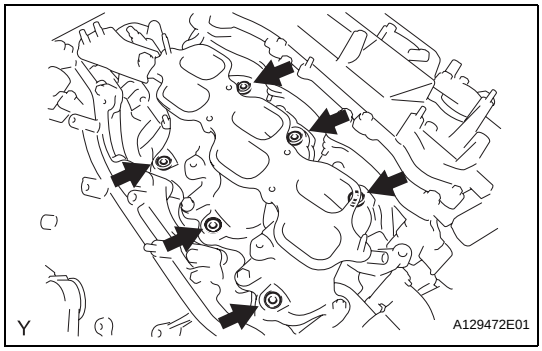

(f) Place the fuel delivery pipe which has the 6 fuel injectors installed to it in position on the intake manifold.

NOTICE:

Be careful not to drop the fuel injectors when installing the fuel delivery pipe.

(g) Temporarily install the 5 bolts which are used to hold the fuel delivery pipe to the intake manifold.

NOTICE:

After installing the fuel injectors, check that they turn smoothly. If not, reinstall the injectors with new O-rings.

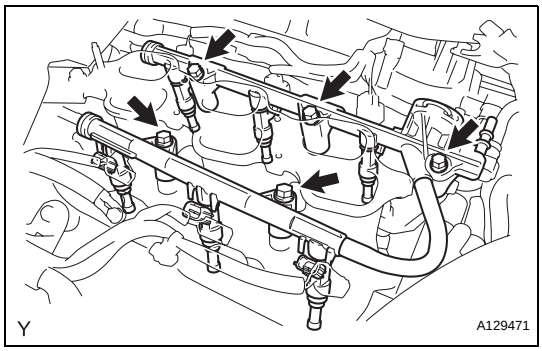

(h) Tighten the 5 bolts which are used to hold the fuel delivery pipe to the intake manifold.

Torque: 21 N*m (214 kgf*cm, 15 ft.*lbf)

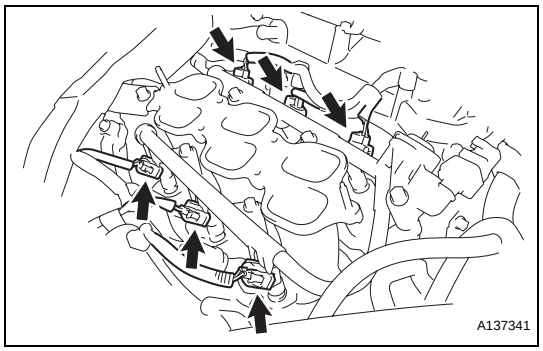

(i) Connect the 6 fuel injector connectors.

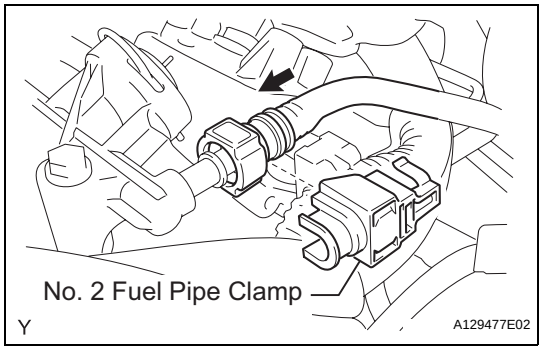

2. CONNECT FUEL TUBE SUB-ASSEMBLY

(a) Push in the tube connector onto the pipe until the tube connector makes a "click" sound.
NOTICE:
- **Before connecting the tube, make sure that it is not damaged. Make sure that there is no dirt present on the connecting surfaces.**
- **After connecting, check that the fuel tube connector and the pipe are securely connected by pulling on them.**

(b) Install the No. 2 fuel pipe clamp.

3. INSTALL INTAKE AIR SURGE TANK ASSEMBLY
NOTICE:
DO NOT apply oil to the bolts listed below:

Tightening Parts
Surge Tank and Intake Manifold
No. 1 Surge Tank Stay and Surge Tank
Throttle Body Bracket and Surge Tank

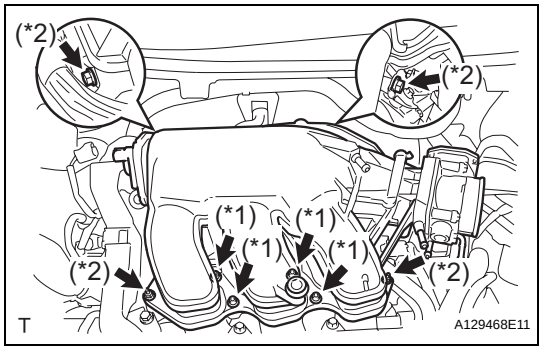

(a) Install a new gasket to the intake air surge tank assembly.

(b) Using a 5 mm hexagon socket wrench, install the 4 bolts. (*1)
Torque: 18 N*m (184 kgf*cm, 13 ft.*lbf)

(c) Install the intake air surge tank assembly with the 2 nuts and 2 bolts. (*2)
Torque: Nut
16 N*m (163 kgf*cm, 12 ft.*lbf)
Bolt
21 N*m (214 kgf*cm, 15 ft.*lbf)

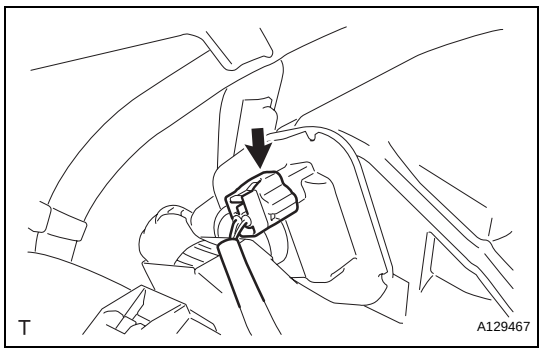

(d) Connect the connector.

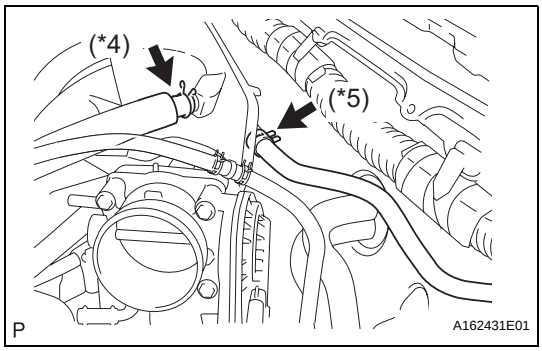

(e) Connect the union to check valve hose. (*1)
(f) Connect the No. 1 ventilation hose. (*2)

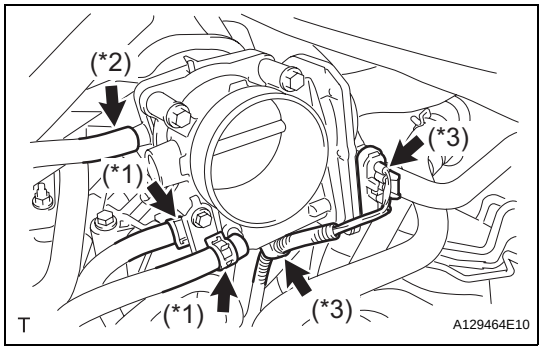

(g) Install the clamp and connect the throttle with motor body assembly connector. (*3)
(h) Connect the vapor feed hose assembly. (*4)
(i) Connect the 2 water by-pass hoses to the throttle with motor body assembly. (*5)

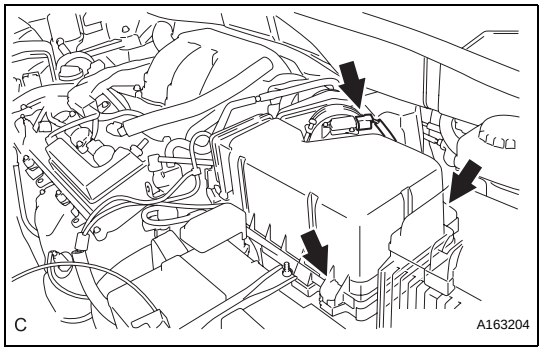

4. INSTALL AIR CLEANER CAP SUB-ASSEMBLY
(a) Install the 2 bolts and air cleaner cap sub-assembly.

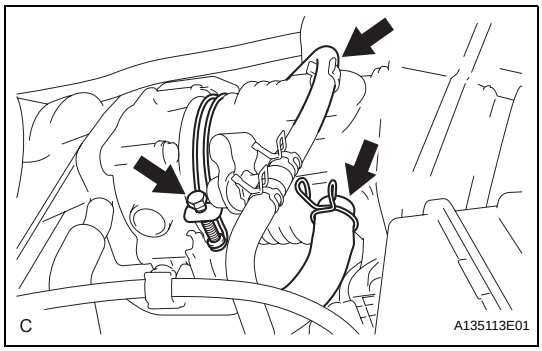

(b) Connect the No. 2 ventilation hose and air cleaner hose band.
(c) Connect the vacuum hose (EVAP) to the air cleaner hose.

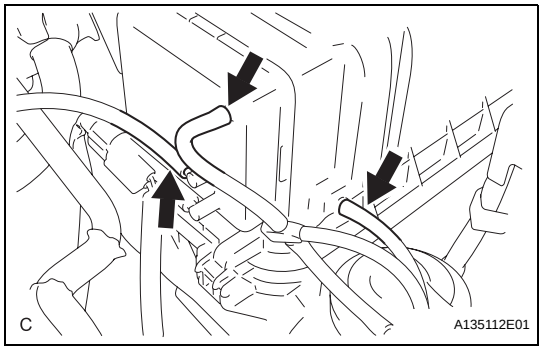

(d) Connect the 3 vacuum hoses.

5. ADD ENGINE COOLANT (See page CO-7)

6. CONNECT CABLE TO NEGATIVE BATTERY TERMINAL

7. INSPECT FOR ENGINE COOLANT LEAK (See page CO-1)

8. INSTALL NO. 1 ENGINE UNDER COVER

9. INSPECT FOR FUEL LEAK (See page FU-7)

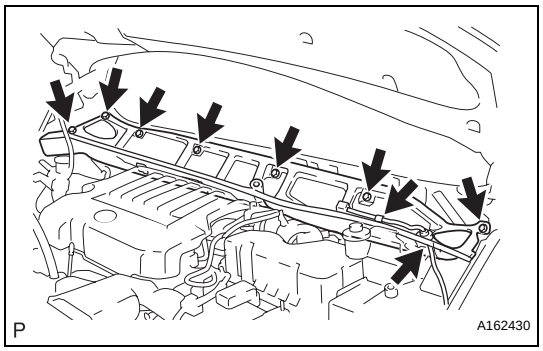

10. **INSTALL V-BANK COVER SUB-ASSEMBLY (See page EM-63)**

11. **INSTALL COWL TOP PANEL SUB-ASSEMBLY OUTER FRONT**
    (a) Install the 7 bolts and the cowl top panel sub-assembly outer front.
    Torque: 7.5 N*m (76 kgf*cm, 66 in.*lbf)
    (b) Connect the fuel pump resistor connector.
    (c) Connect the wire harness clamp.

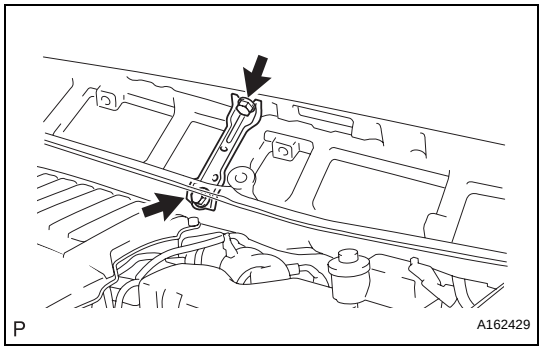

12. **INSTALL NO. 1 COWL TOP TO COWL BRACE INNER**
    (a) Install the 2 bolts and the No.1 cowl top to cowl brace inner.
    Torque: 7.5 N*m (76 kgf*cm, 66 in.*lbf)

13. **INSTALL WINDSHIELD WIPER MOTOR AND LINK ASSEMBLY (See page WW-6)**

14. **INSTALL FRONT WIPER ARM LH (See page WW-6)**

15. **INSTALL FRONT WIPER ARM RH (See page WW-7)**