REMOVAL

1. **DISCHARGE FUEL SYSTEM PRESSURE**
   (See page FU-1)
2. **REMOVE CHARCOAL CANISTER PROTECTOR**
   (a) Remove the 6bolts and the charcoal canister protector.
3. **REMOVE REAR FLOOR NO. 2 CROSSMEMBER BRACE LH (See page FU-41)**
4. **REMOVE FUEL TANK FILLER HOSE COVER (See page FU-41)**
5. **REMOVE FUEL TANK ASSEMBLY (See page FU-41)**

DISASSEMBLY

1. **REMOVE FUEL TANK TO FILLER PIPE HOSE (See page FU-43)**

2. **REMOVE FUEL TANK MAIN TUBE SUB-ASSEMBLY**

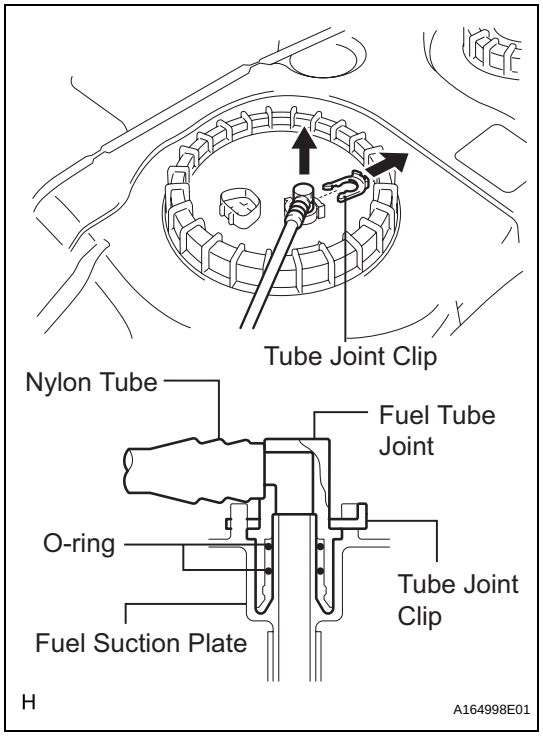

(a) Remove the tube joint clip, and pull out the fuel main tube.

NOTICE:

- **Check if there is any dirt or mud around the connector before this operation and remove the dirt as necessary**
- **Be careful of mud because the quick connector has an O-ring which seals the pipe and connector that can be contaminated.**
- **Do not use any tool in this operation.**
- **Do not bend or twist the nylon tube. Protect the connector by covering it with a vinyl or plastic bag.**
- **When the pipe and connector are stuck, push and pull the connector to release and pull the connector out carefully.**

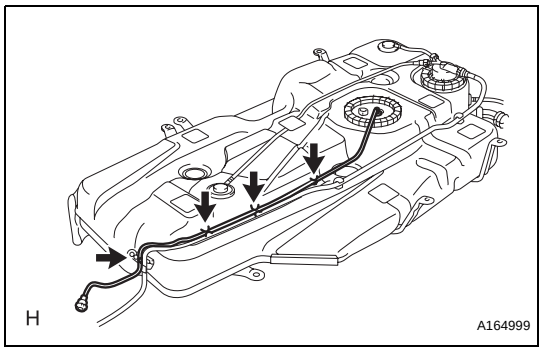

(b) Unfasten the 4 claws and remove the fuel tank main tube from the fuel tank.

3. **REMOVE FUEL SUCTION TUBE ASSEMBLY WITH PUMP AND GAUGE**

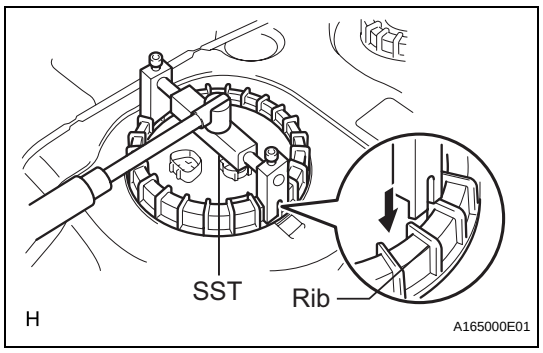

(a) Using SST, loosen the fuel pump gauge retainer.

SST 09808-14020 (09808-01410, 09808-01420, 09808-01430)

HINT:

A rib on the fuel pump gauge retainer can be fitted into a tip of SST.

(b) Remove the fuel pump gauge retainer.

(c) Remove the fuel suction tube assembly with pump and gauge and the fuel suction tube set gasket from the fuel tank.

NOTICE:

Be careful not bend the arm of the fuel sender gauge.

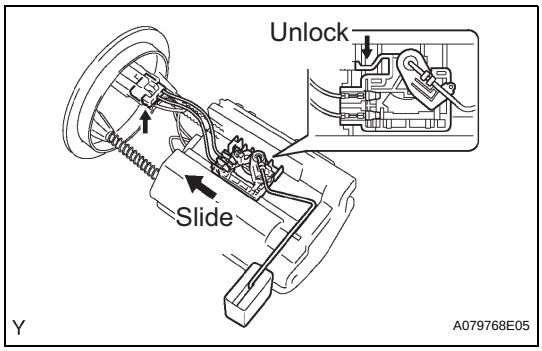

4. REMOVE FUEL SENDER GAUGE ASSEMBLY

(a) Disconnect the fuel sender gauge connector.

(b) Unlock the fuel sender gauge and slide it to remove.

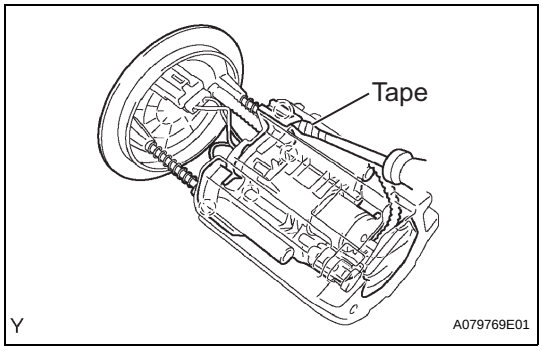

5. REMOVE FUEL SUCTION PLATE SUB-ASSEMBLY

(a) Using a screwdriver with the tip wrapped in tape, disconnect the 4 snap-claws from the claw holes and remove the fuel suction plate.

NOTICE:

Do not damage the fuel suction plate and the No. 1 fuel suction support.

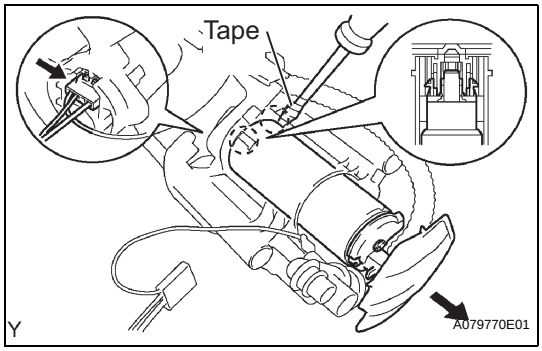

6. REMOVE FUEL PUMP

(a) Disconnect the fuel pump connector.

(b) Using a small screwdriver with the tip wrapped in tape, disconnect the 2 claws from the claw holes and pull out the fuel pump.

NOTICE:

Do not damage the fuel pump and the fuel suction plate.

(c) Remove the O-ring and the fuel pump spacer from the fuel pump.

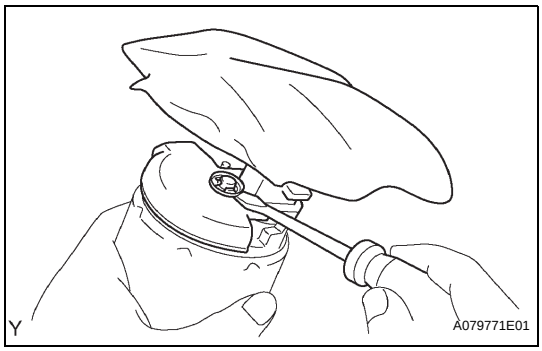

7. REMOVE FUEL FILTER ASSEMBLY

(a) Using a small screwdriver, pry out the clip.

(b) Remove the fuel filter assembly from the fuel pump.

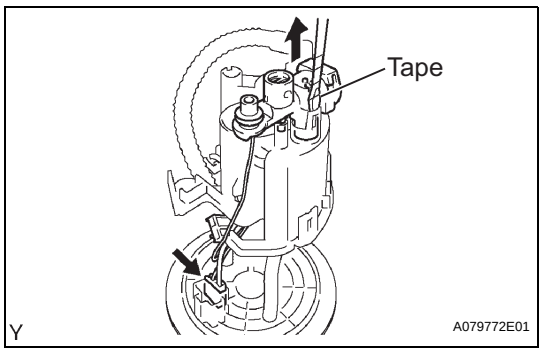

8. REMOVE NO. 1 FUEL TUBE JOINT

(a) Remove the connector.

(b) Using a screwdriver with the tip wrapped in tape, disconnect the snap-claw from the claw hole and pull out the No. 1 fuel tube joint.

NOTICE:

Do not damage the No. 1 fuel tube joint and the fuel suction plate.