REMOVAL

1. **DISCHARGE FUEL SYSTEM PRESSURE**
(See page FU-1)

2. **REMOVE CHARCOAL CANISTER PROTECTOR (See page FU-30)**

3. **REMOVE REAR FLOOR NO. 2 CROSSMEMBER BRACE LH**
   (a) Remove the 2 bolts and the rear floor No. 2 crossmember brace LH.

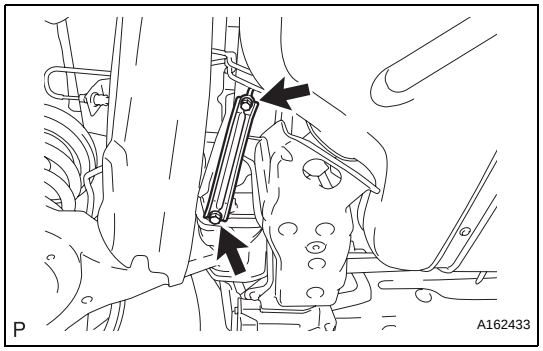

4. **REMOVE FUEL TANK FILLER HOSE COVER**
   (a) Remove the 3 bolts and the fuel tank filler hose cover.

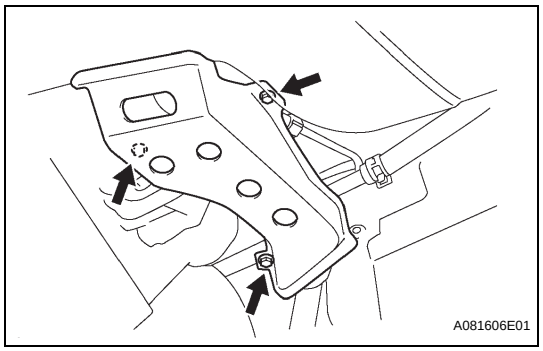

5. **REMOVE FUEL TANK ASSEMBLY**
   (a) Disconnect the fuel tank vent hose.
      (1) Deeply push the connector to release the locking tab.
      (2) Pinch portion A.
      (3) Pull out the connector.

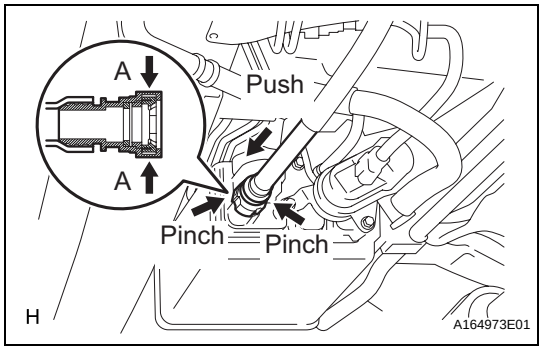

   (b) Disconnect the fuel tank main tube sub-assembly.
      (1) Pinch the tube connector and then pull out the fuel tank main tube sub-assembly.
      NOTICE:
      - **Check if there is any dirt or mud around the connector before this operation and remove the dirt as necessary.**
      - **Be careful of mud because the quick connector has an O-ring which seals the pipe and connector that can be contaminated.**

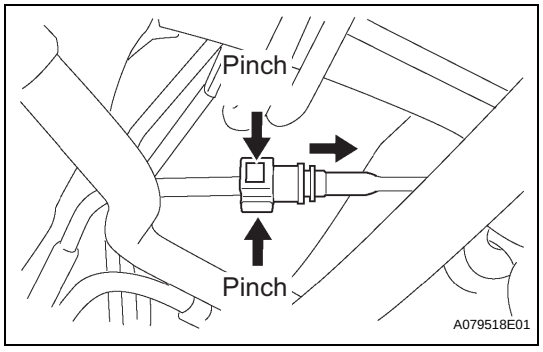

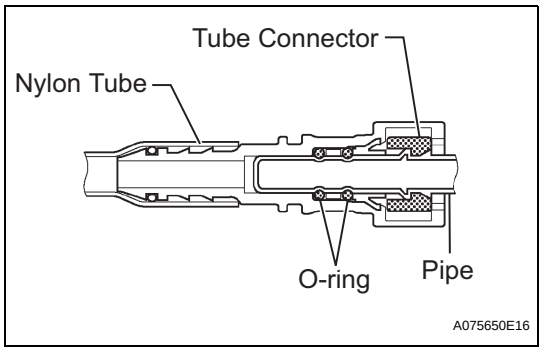

- **Do not use any tool in this operation.**
- **Do not bend or twist the nylon tube. Protect the connector by covering it with a vinyl or plastic bag.**
- **When the pipe and the connector are stuck, push and pull the connector to release and pull the connector out carefully.**

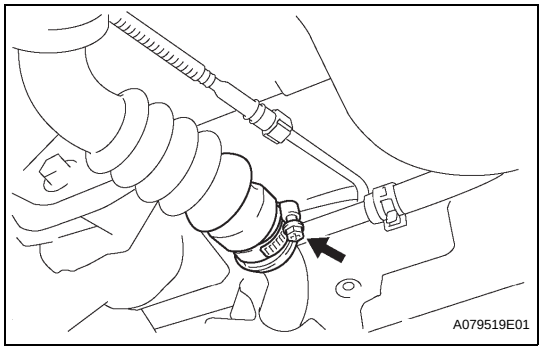

(c) Disconnect the fuel tank to filler pipe hose.
(1) Loosen the hose clamp bolt and disconnect the fuel tank to filler pipe hose.

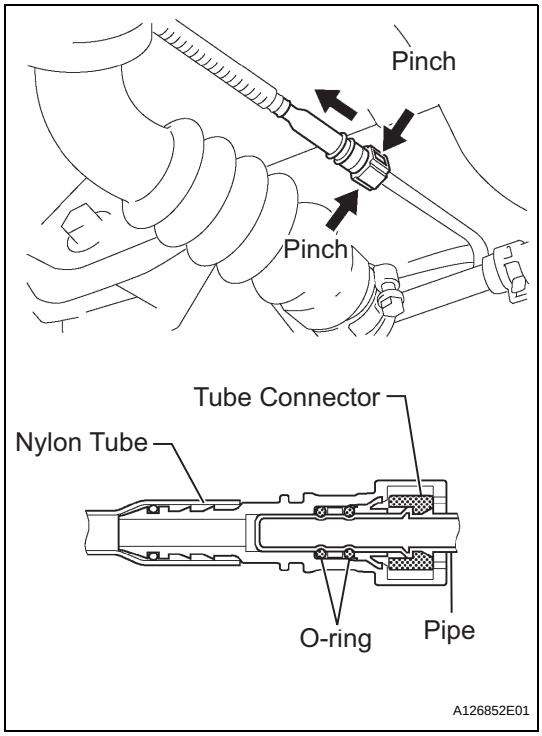

(d) Disconnect the fuel tube.
(1) Pinch the tube connector and then pull out the fuel tank main tube sub-assembly.
NOTICE:
- **Check if there is any dirt or mud around the connector before this operation and remove the dirt as necessary.**
- **Be careful of mud because the quick connector has an O-ring which seals the pipe and connector that can be contaminated.**
- **Do not use any tool in this operation.**
- **Do not bend or twist the nylon tube. Protect the connector by covering it with a vinyl or plastic bag.**
- **When the pipe and the connector are stuck, push and pull the connector to release and pull the connector out carefully.**

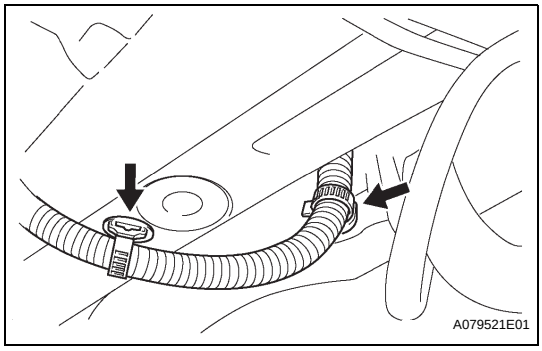

(e) Remove the 2 wire harness clamps.

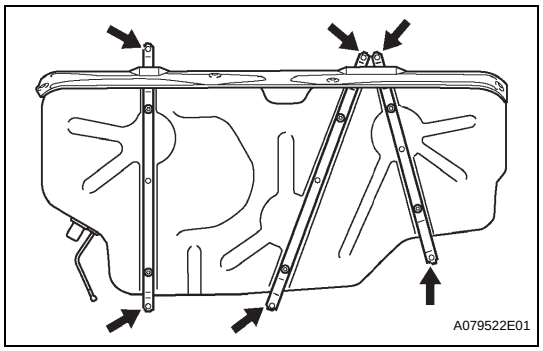

(f) Set up a transmission jack under the fuel tank assembly.
(g) Remove the 6 set bolts of the 3 fuel tank bands.

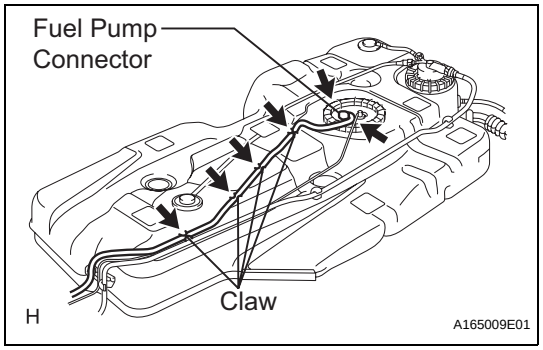

(h) While operating the transmission jack, unfasten the 4 claws for the wire harness and disconnect the fuel pump connector, then remove the fuel tank and the 3 fuel tank bands from the vehicle.

6. REMOVE FUEL TANK MAIN TUBE SUB-ASSEMBLY (See page FU-30)

7. REMOVE FUEL SUCTION TUBE ASSEMBLY WITH PUMP AND GAUGE (See page FU-31)

8. DRAIN FUEL

9. REMOVE FUEL TANK TO FILLER PIPE HOSE

(a) Loosen the hose clamp bolt and remove the fuel tank to filler pipe hose from the fuel tank.

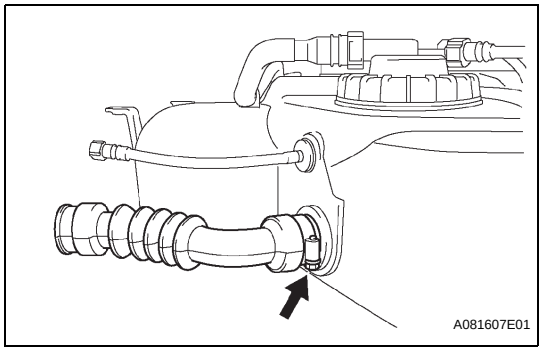

10. REMOVE FUEL TANK VENT HOSE

(a) Remove the hose of the fuel tank vent hose from the 3 hose clamps.
(b) Remove the fuel tank vent hose.
(1) Deeply push the connector to release the locking tab.
(2) Pinch portion A.
(3) Pull out the connector.

