INSTALLATION

1. CONNECT FUEL TANK VENT HOSE

2. INSTALL FUEL TANK TO FILLER PIPE HOSE

(a) Install a new fuel tank to filler pipe hose as shown in the illustration.

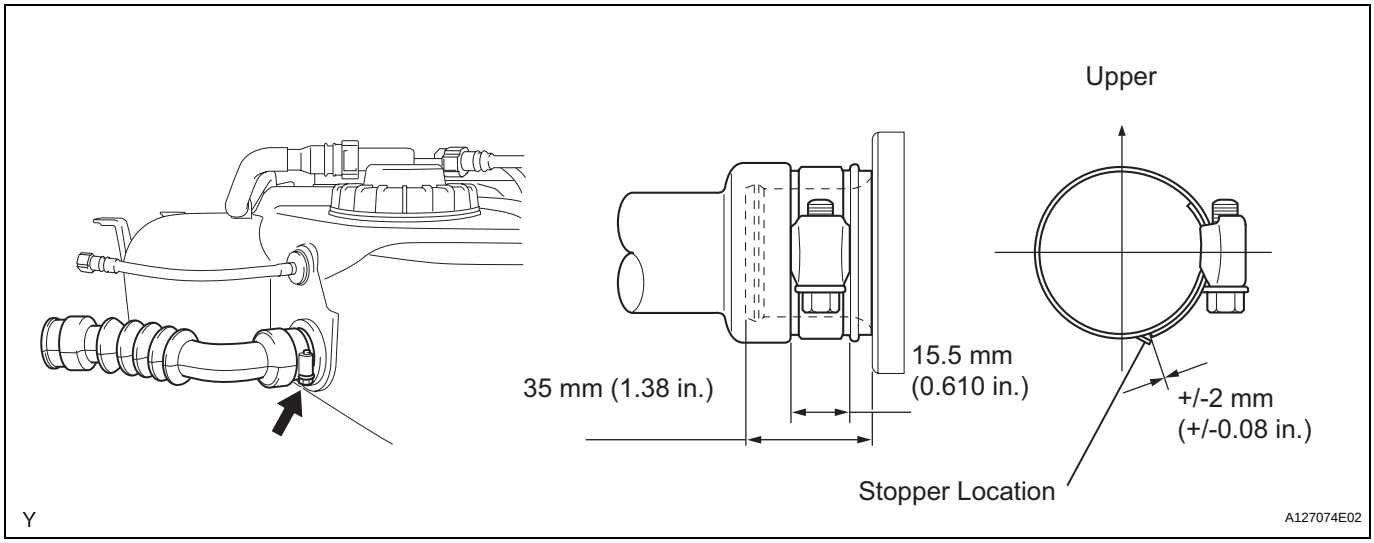

3. INSTALL FUEL SUCTION TUBE ASSEMBLY WITH PUMP AND GAUGE (See page FU-34)

4. INSTALL FUEL TANK MAIN TUBE SUB-ASSEMBLY (See page FU-35)

5. INSTALL FUEL TANK ASSEMBLY

(a) Set up the fuel tank assembly to the transmission jack.

(b) While operating the transmission jack, fasten the 4 claws for the wire harness and connect the fuel pump connector, then install the fuel tank and the 3 fuel tank bands to the vehicle.

(c) Tighten the 6 set bolts of the 3 fuel tank bands.
Torque: 33 N*m (336 kgf*cm, 24 ft.*lbf)

(d) Install the 2 wire harness clamps.

(e) Connect the fuel tube.

(1) Push in the fuel tube connector to the pipe until fuel tube connector makes "click" sound.
NOTICE:
- **Check if there is any damage or foreign objects on the connected part.**
- **After connecting, check if the connector and the pipe are securely connected by pulling on them.**

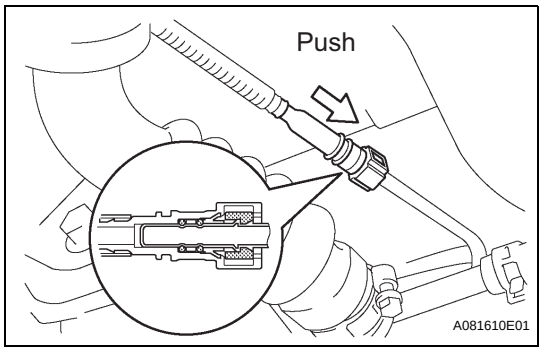

(f) Connect the fuel tank to filler pipe hose as shown in the illustration.

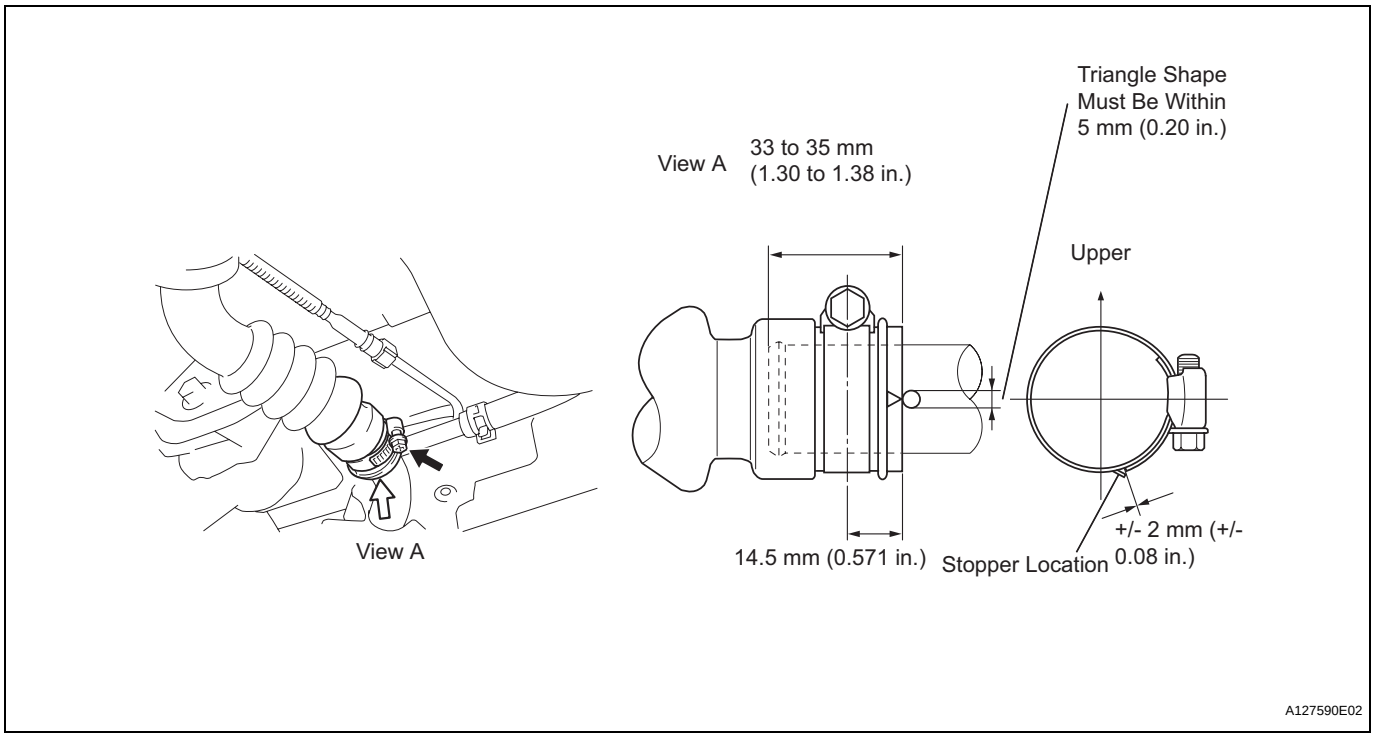

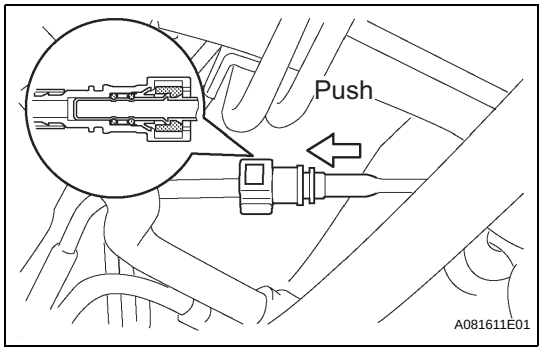

(g) Connect the fuel tank main tube.
(1) Push in the fuel tube connector to the pipe until fuel tube connector makes "click" sound.
NOTICE:
- **Check if there is any damage or foreign objects on the connected part.**
- **After connecting, check if the connector and the pipe are securely connected by pulling on them.**

(h) Connect the fuel tank vent hose.

6. ADD FUEL

7. INSPECT FOR FUEL LEAK (See page FU-7)

8. INSTALL FUEL TANK FILLER HOSE COVER

(a) Install the 3 bolts and the fuel tank filler hose cover.
Torque: 5.0 N*m (51 kgf*cm, 44 in.*lbf)

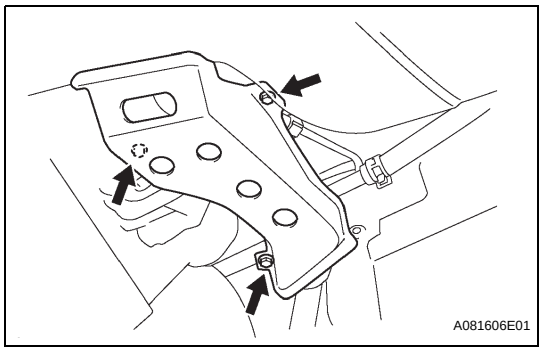

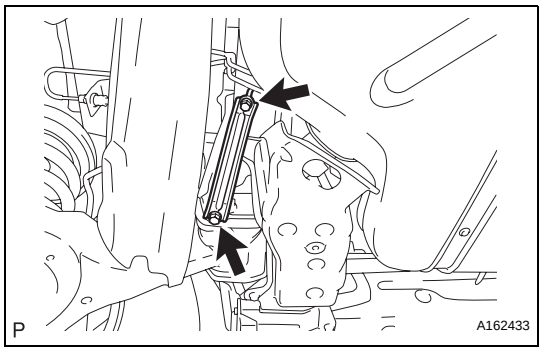

9. INSTALL REAR FLOOR NO. 2 CROSSMEMBER BRACE LH

(a) Install the rear floor No. 2 crossmember brace LH with 2 bolts.
Torque: 28 N*m (286 kgf*cm, 21 ft.*lbf)

10. INSTALL CHARCOAL CANISTER PROTECTOR (See page FU-36)