AIR FUEL RATIO SENSOR (for 4WD)

COMPONENTS

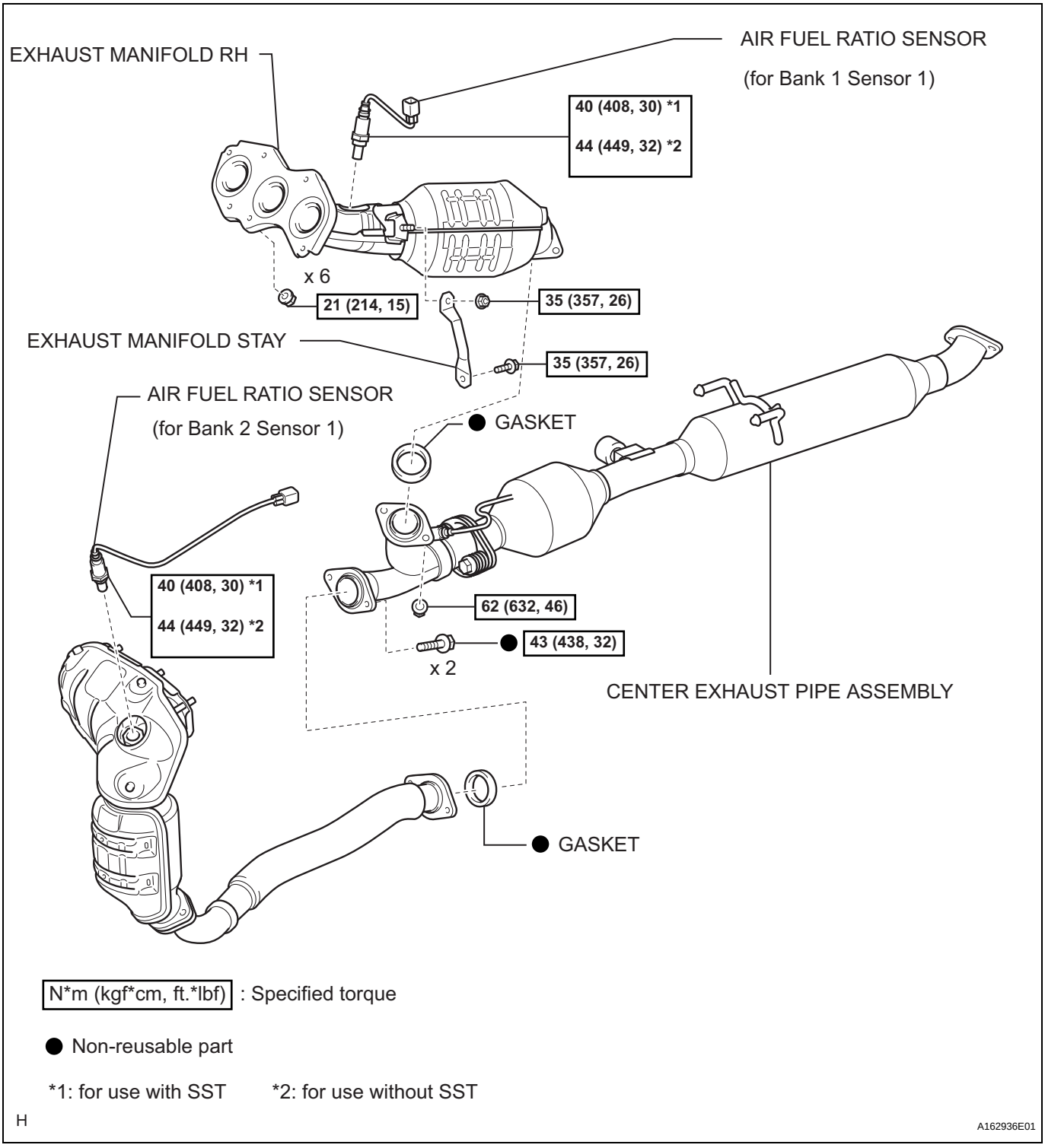

ON-VEHICLE INSPECTION

HINT:
The type of ignition switch on this model differs according to the specifications of the vehicle. For the expressions used in this section, refer to the "EXPRESSIONS OF IGNITION SWITCH" precaution (See page ES-1).

1. CHECK AIR FUEL RATIO COMPENSATION SYSTEM

(a) Connect the intelligent tester to the DLC3.
(b) Turn the ignition switch to the ON position.
(c) Select the following menu items: Data List / A/FS B1 S1 and O2S B1 S2.
(d) Warm up the A/F sensor with the engine speed at 2500 rpm for approximately 2 minutes.

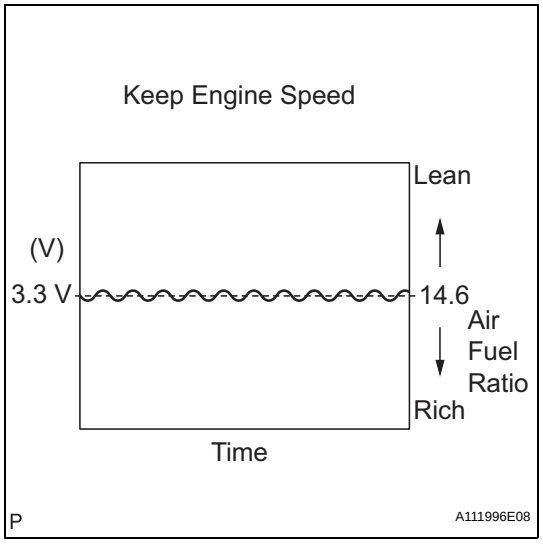

(e) Keep the engine speed at 2500 rpm and confirm that the "A/FS B1 S1" and "A/FS BS S1" display is as shown in the illustration.
HINT:
- The illustration may slightly differ from the display on the intelligent tester.
- Only the intelligent tester displays the waveform of the A/F sensor.
- On the tester, select the following menu items: DIAGNOSIS / ENHANCED OBD II / ACTIVE TEST / A/F CONTROL.
- The A/F CONTROL operation lowers the fuel injection volume by 12.5% or increases the injection volume by 25%.
- The sensors react in accordance with increases and decreases in the fuel injection volume.

EC

Standard

Tester Display (Sensor)	Injection Volume	Status	Voltage
AFS B1 S1 (A/F)	+25%	Rich	Less than 3.0
	-12.5%	Lean	More than 3.35
AFS B2 S1 (A/F)	+25%	Rich	Less than 3.0
	-12.5%	Lean	More than 3.35

NOTICE:
The A/F sensor has an output delay of a few seconds.

(f) Confirm that the "O2S B1 S2" and "A/FS BS S1" display changes between 0 to 1 V with the engine speed at 2500 rpm.

OK:
The voltage output oscillates more than 8 times in 10 seconds.

NOTICE:
- **Perform the check immediately after warming the engine up.**
- **If the voltage variation could not be verified, warm up the A/F sensor again. If it could not be verified even after warming up the sensor again, check for DTCs (See page ES-39).**

REMOVAL

1. DISCONNECT CABLE FROM NEGATIVE BATTERY TERMINAL

CAUTION:

Wait at least 90 seconds after disconnecting the cable from the negative (-) battery terminal to prevent airbag and seat belt pretensioner activation.

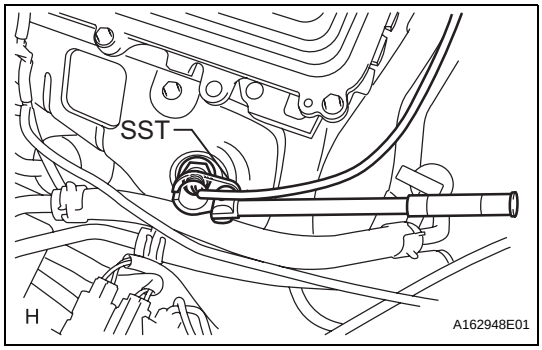

2. REMOVE AIR FUEL RATIO SENSOR (for Bank 2 Sensor 1)

(a) Disconnect the sensor connector.

(b) Using SST, remove the sensor from the exhaust manifold.

SST 09224-00010

3. REMOVE CENTER EXHAUST PIPE ASSEMBLY

(a) Disconnect the heated oxygen sensor (for Bank 1 Sensor 2) connector under the center console.

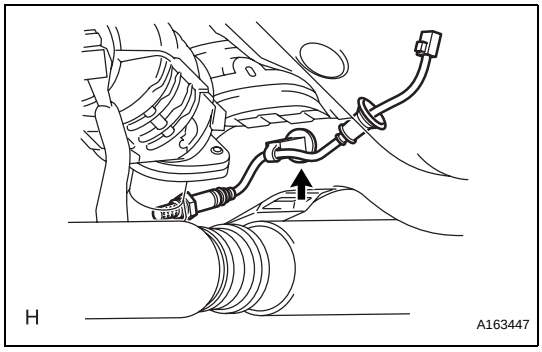

(b) Remove the clip as shown in the illustration.

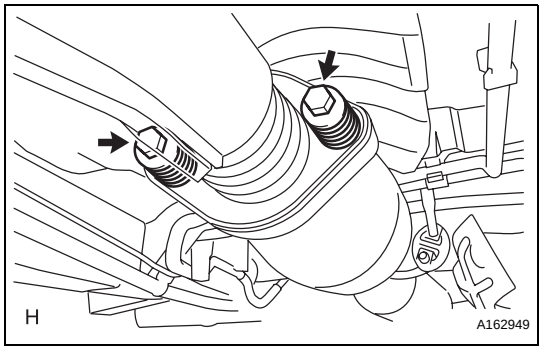

(c) Remove the 2 bolts and 2 compression springs.

EC

(d) Remove the 2 bolts, 2 nuts and center exhaust pipe assembly.

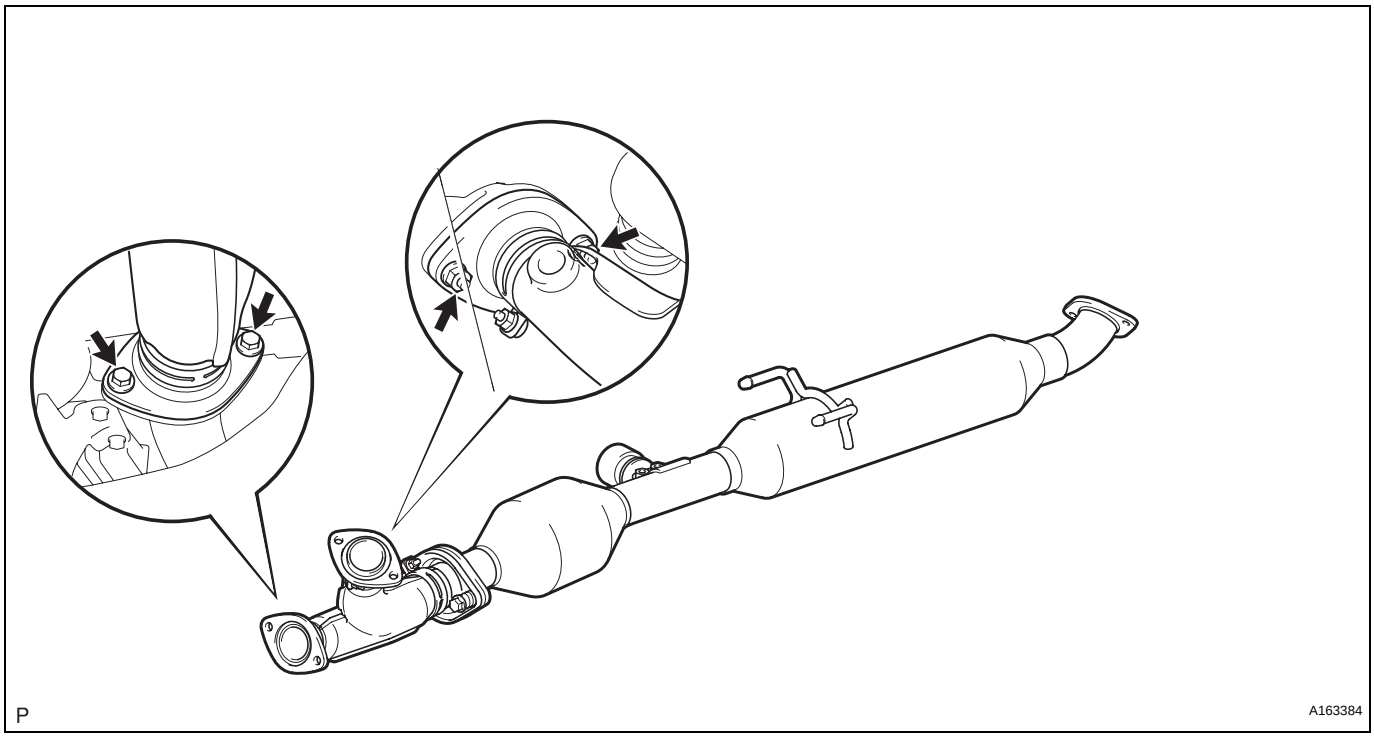

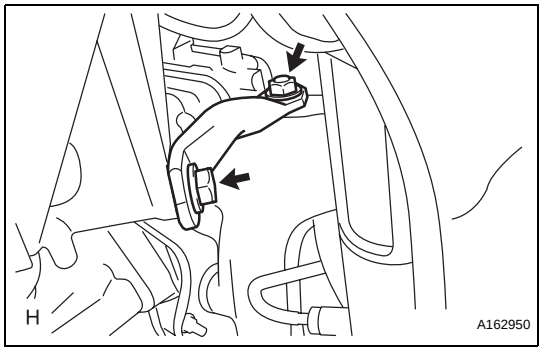

4. REMOVE EXHAUST MANIFOLD RH

(a) Remove the nut, bolt and exhaust manifold stay.

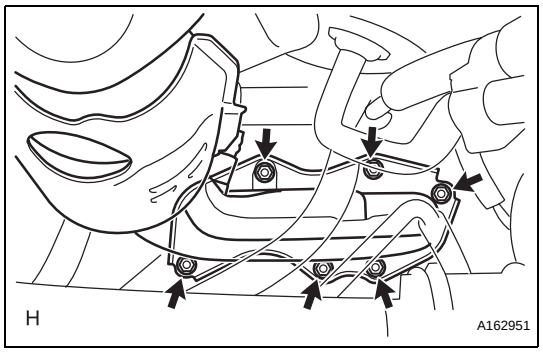

(b) Remove the 6 nuts and exhaust manifold RH.

(c) Remove the gasket and exhaust manifold to head gasket.