HEATED OXYGEN SENSOR (for 2WD)

COMPONENTS

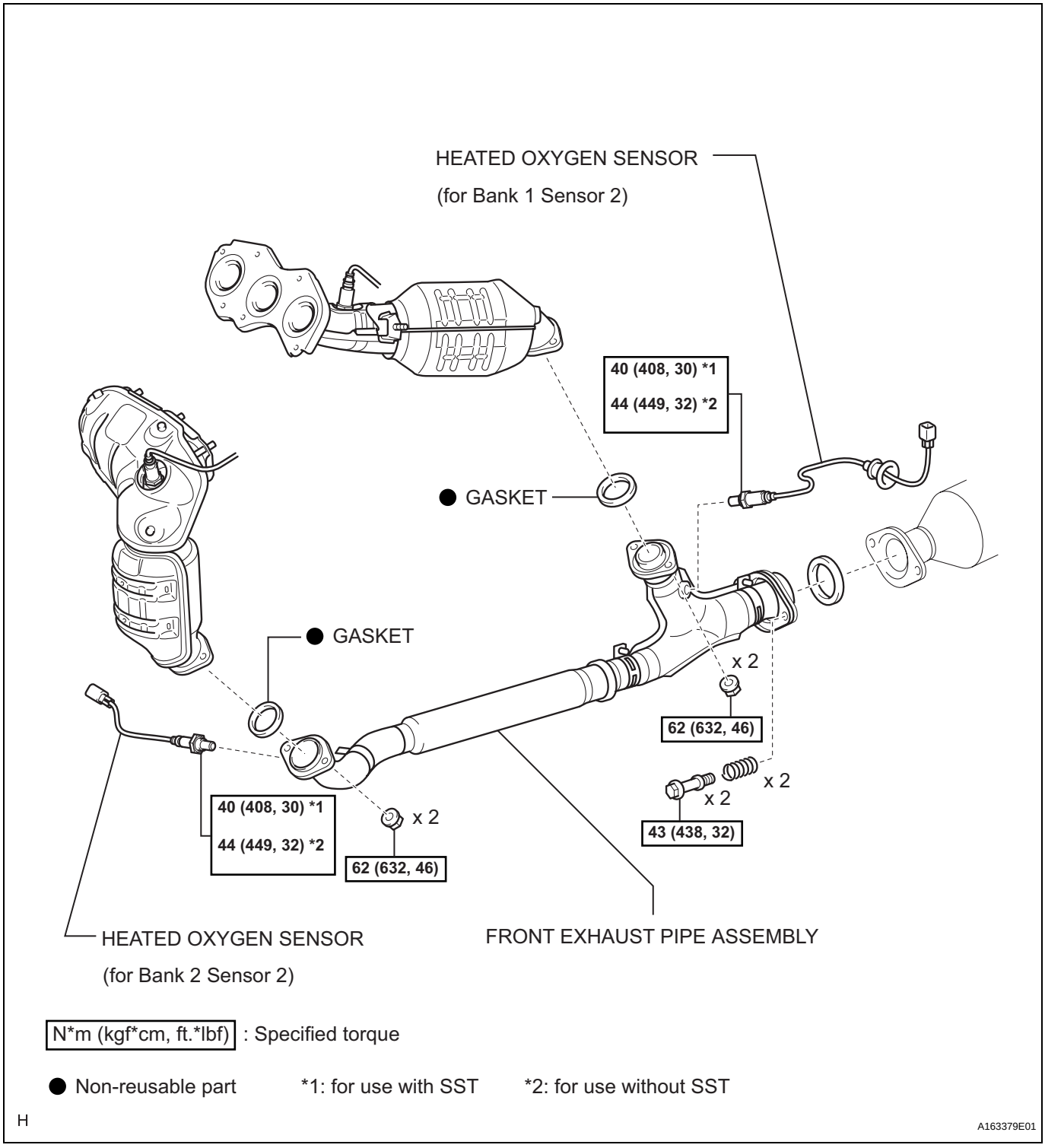

REMOVAL

1. DISCONNECT CABLE FROM NEGATIVE BATTERY TERMINAL

CAUTION:

Wait at least 90 seconds after disconnecting the cable from the nagative (-) battery terminal to prevent airbag and seat belt pretensioner activation.

2. REMOVE HEATED OXYGEN SENSOR (for Bank 1 Sensor 2)

(a) Disconnect the sensor connector under the center console.

(b) Using SST, remove the heated oxygen sensor.
SST 09224-00010

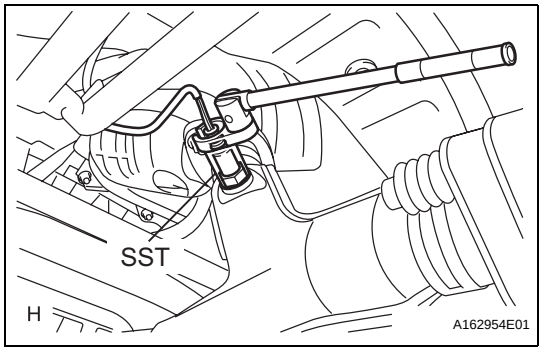

3. REMOVE FRONT EXHAUST PIPE ASSEMBLY

(a) Disconnect the heated oxygen sensor (for Bank 2 Sensor 2) connector.

(b) Remove the 2 bolts and 2 compression springs.

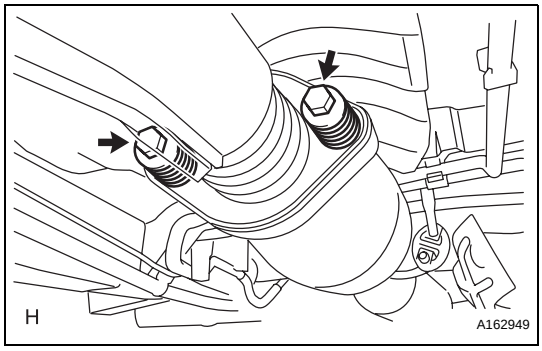

EC

(c) Remove the 6 nuts and front exhaust pipe assembly.

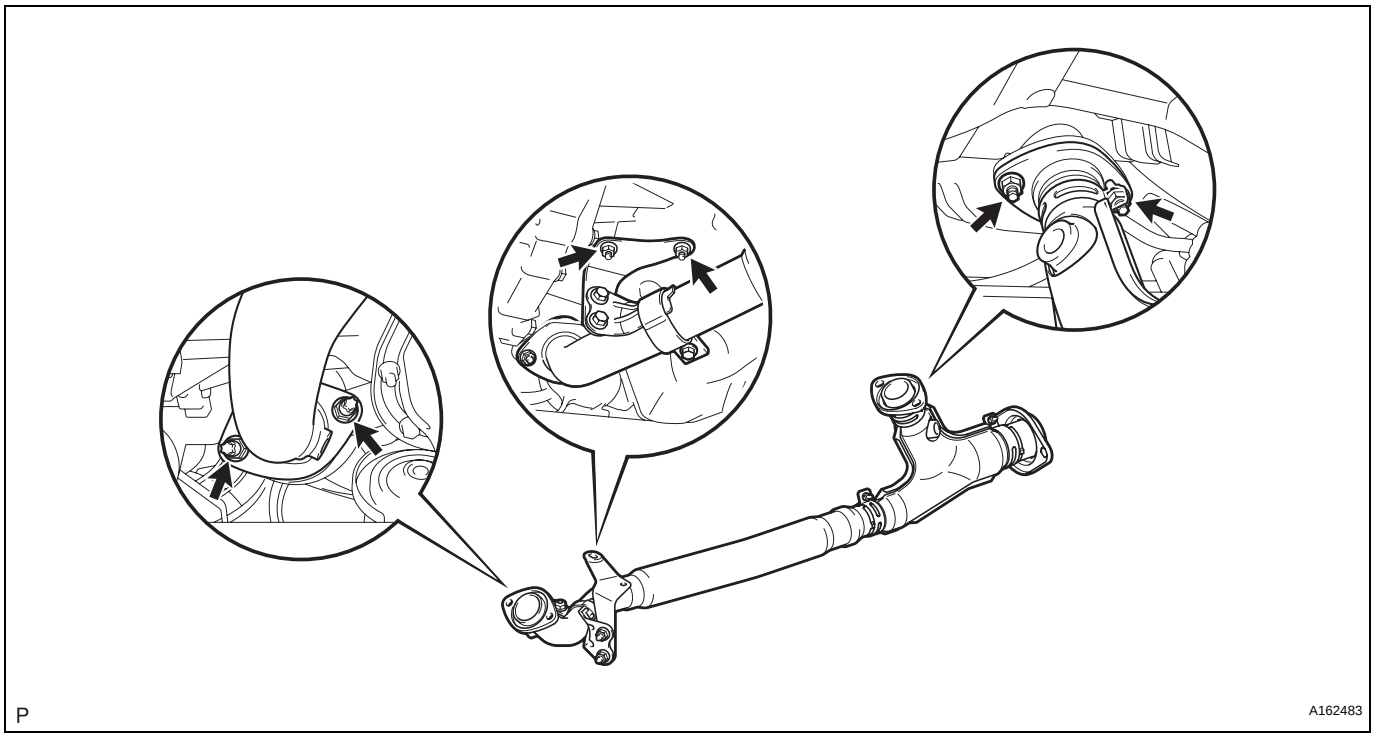

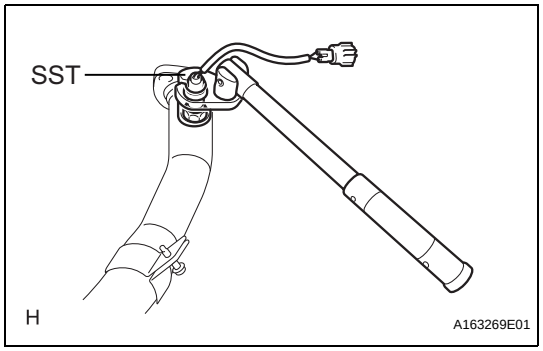

4. REMOVE HEATED OXYGEN SENSOR (for Bank 2 Sensor 2)

(a) Using SST, remove the heated oxygen sensor from the front exhaust pipe assembly.
SST 09224-00010

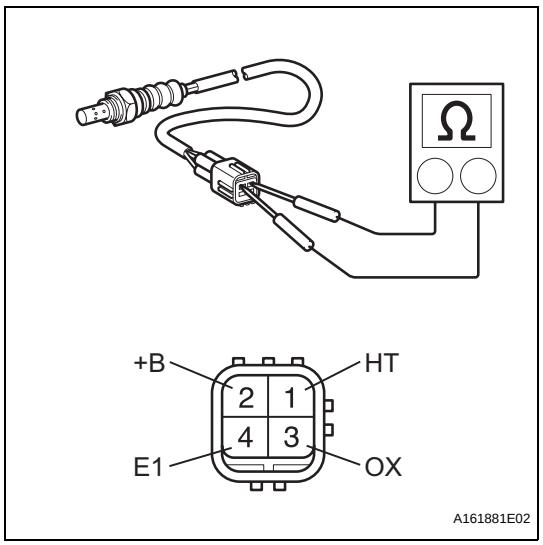

INSPECTION

1. INSPECT HEATED OXYGEN SENSOR (for Bank 1 Sensor 2)

(a) Measure the resistance of the sensor.
Standard resistance

Tester Connection	Specified Condition
1 (HT) - 2 (+B)	11 to 16 Ω at 20°C (68°F)
1 (HT) - 4 (E1)	10 kΩ or higher

If the resistance is not as specified, replace the sensor.

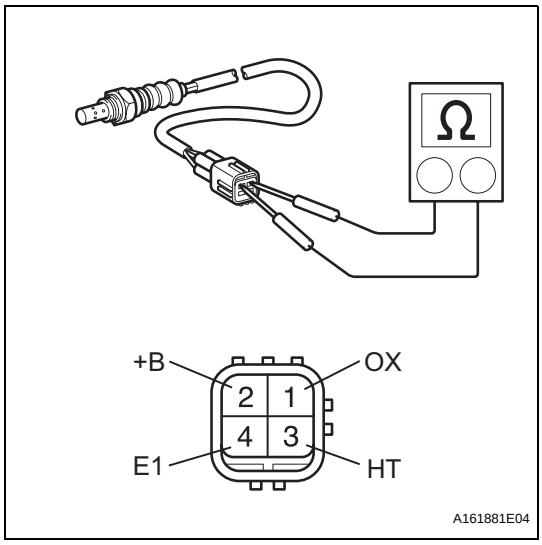

2. INSPECT HEATED OXYGEN SENSOR (for Bank 2 Sensor 2)

(a) Measure the resistance of the sensor.

Standard resistance

Tester Connection	Specified Condition
3 (HT) - 2 (+B)	11 to 16 Ω at 20°C (68°F)
3 (HT) - 4 (E1)	10 kΩ or higher

If the resistance is not as specified, replace the sensor.

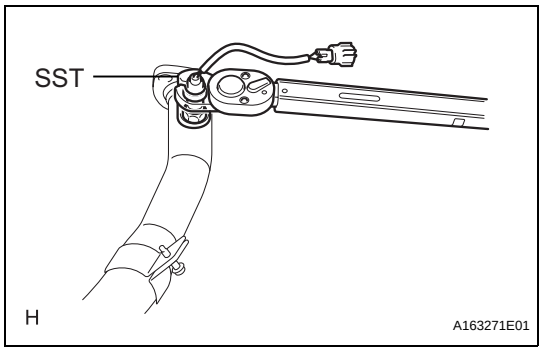

INSTALLATION

1. INSTALL HEATED OXYGEN SENSOR (for Bank 2 Sensor 2)

(a) Using SST, install the heated oxygen sensor to the front exhaust pipe.

SST 09224-00010

Torque: 40 N*m (408 kgf*cm, 30 ft.*lbf) for use with SST
44 N*m (449 kgf*cm, 32 ft.*lbf) for use without SST

HINT:

- Use a torque wrench with a fulcrum length of 30 cm (11.81 in.).
- Make sure that SST and a wrench are connected in a straight line.

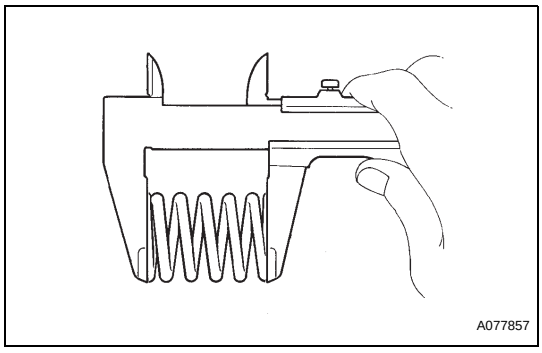

2. INSTALL FRONT EXHAUST PIPE ASSEMBLY

(a) Check the compression springs.

(1) Check the compression springs using vernier calipers.

Specified length:
38.86 mm (1.5299 in.)

HINT:

If the result is not as specified, replace the compression spring.

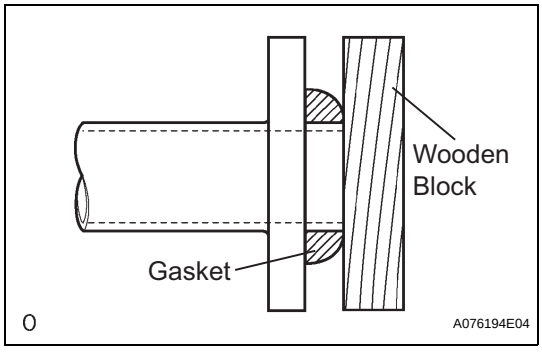

(b) Install the gasket.

(1) Install a new gasket by hand onto the front exhaust pipe assembly.

(2) Using a plastic hammer and wooden block, tap in the new gasket until its surface is flush with the front exhaust pipe.

NOTICE:

- **Be careful with the installation direction of the gasket.**
- **Do not damage the gasket.**
- **Do not reuse the gasket.**

- **To ensure a proper seal, do not use the exhaust pipe to force the gasket on to the front exhaust pipe.**

(c) Install 2 new gaskets to the front exhaust pipe assembly.

(d) Install the front exhaust pipe assembly with the 4 nuts.
Torque: 62 N*m (632 kgf*cm, 46 ft.*lbf)

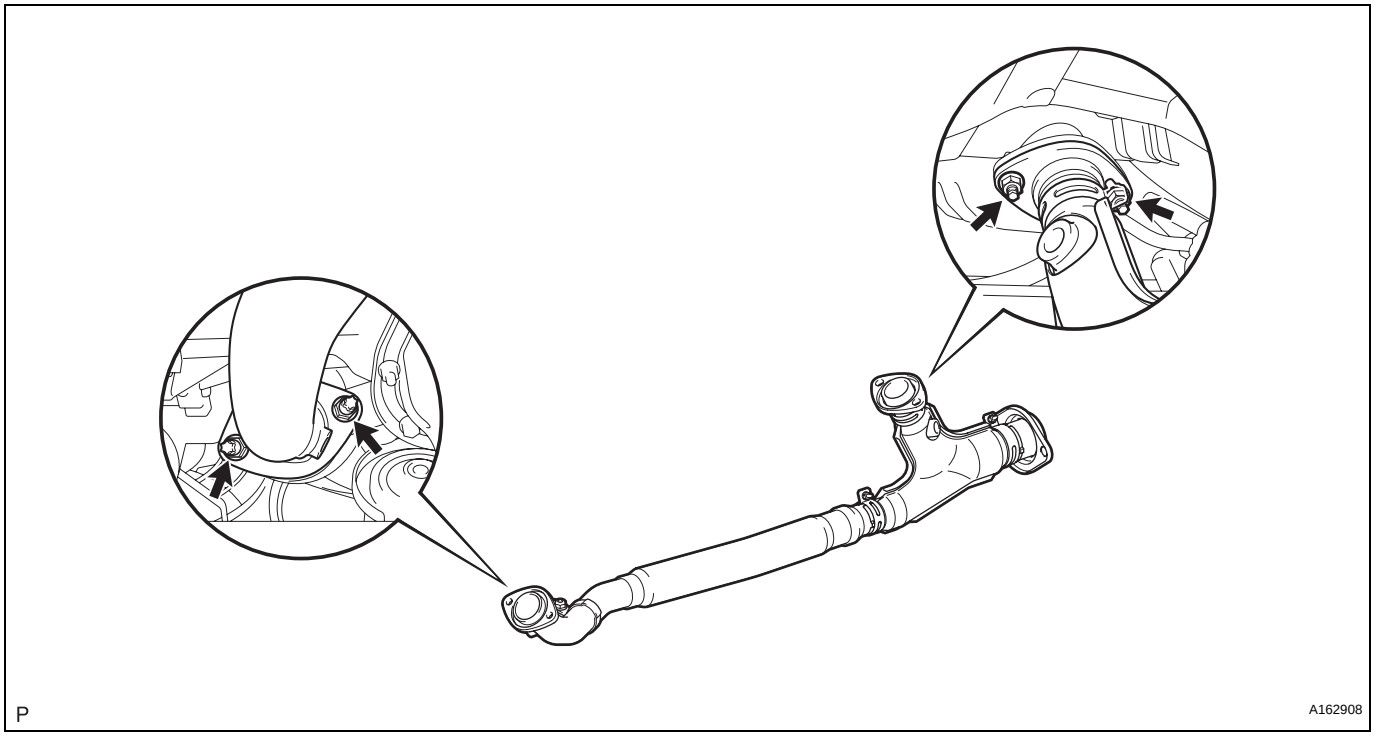

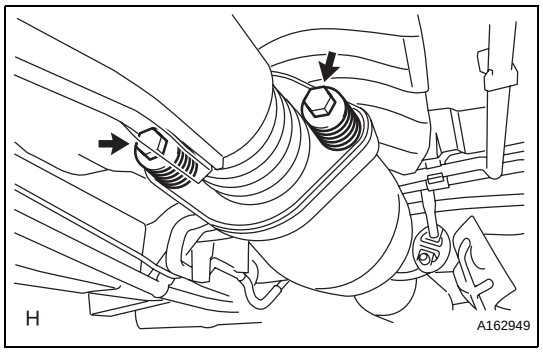

(e) Install the front exhaust pipe assembly with the 2 compression springs and 2 bolts.
Torque: 43 N*m (438 kgf*cm, 32 ft.*lbf)

(f) Install the No. 1 exhaust pipe support bracket with 2 new nuts.
Torque: 21 N*m (214 kgf*cm, 15 ft.*lbf)

EC

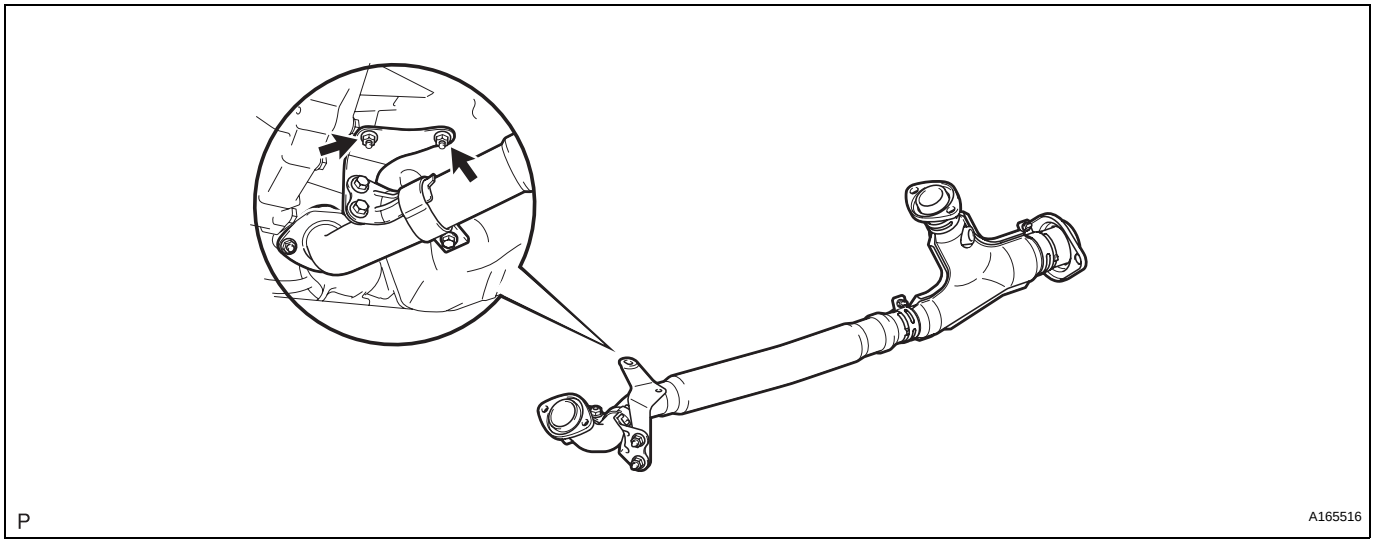

EC

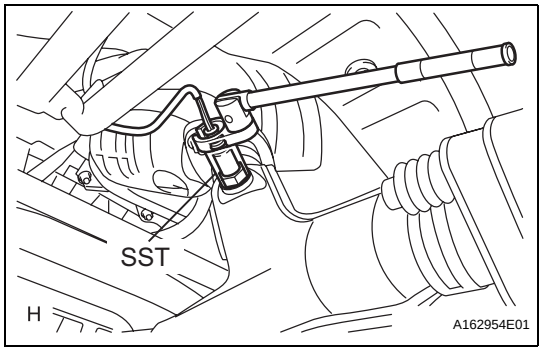

(g) Connect the heated oxygen sensor (for Bank 2 sensor 2) connector.

3. INSTALL HEATED OXYGEN SENSOR (for Bank 1 Sensor 2)

(a) Using SST, install the heated oxygen sensor.

SST 09224-00010

Torque: 40 N*m (408 kgf*cm, 30 ft.*lbf) for use with SST
44 N*m (449 kgf*cm, 32 ft.*lbf) for use without SST

HINT:

- Use a torque wrench with a fulcrum length of 30 cm (11.81 in.).
- Make sure that SST and a wrench are connected in a straight line.

(b) Connect the heated oxygen sensor (for Bank 1 Sensor 2) connector.

4. CONNECT CABLE TO NEGATIVE BATTERY TERMINAL

5. INSPECT FOR EXHAUST GAS LEAK