HEATED OXYGEN SENSOR (for 4WD)

COMPONENTS

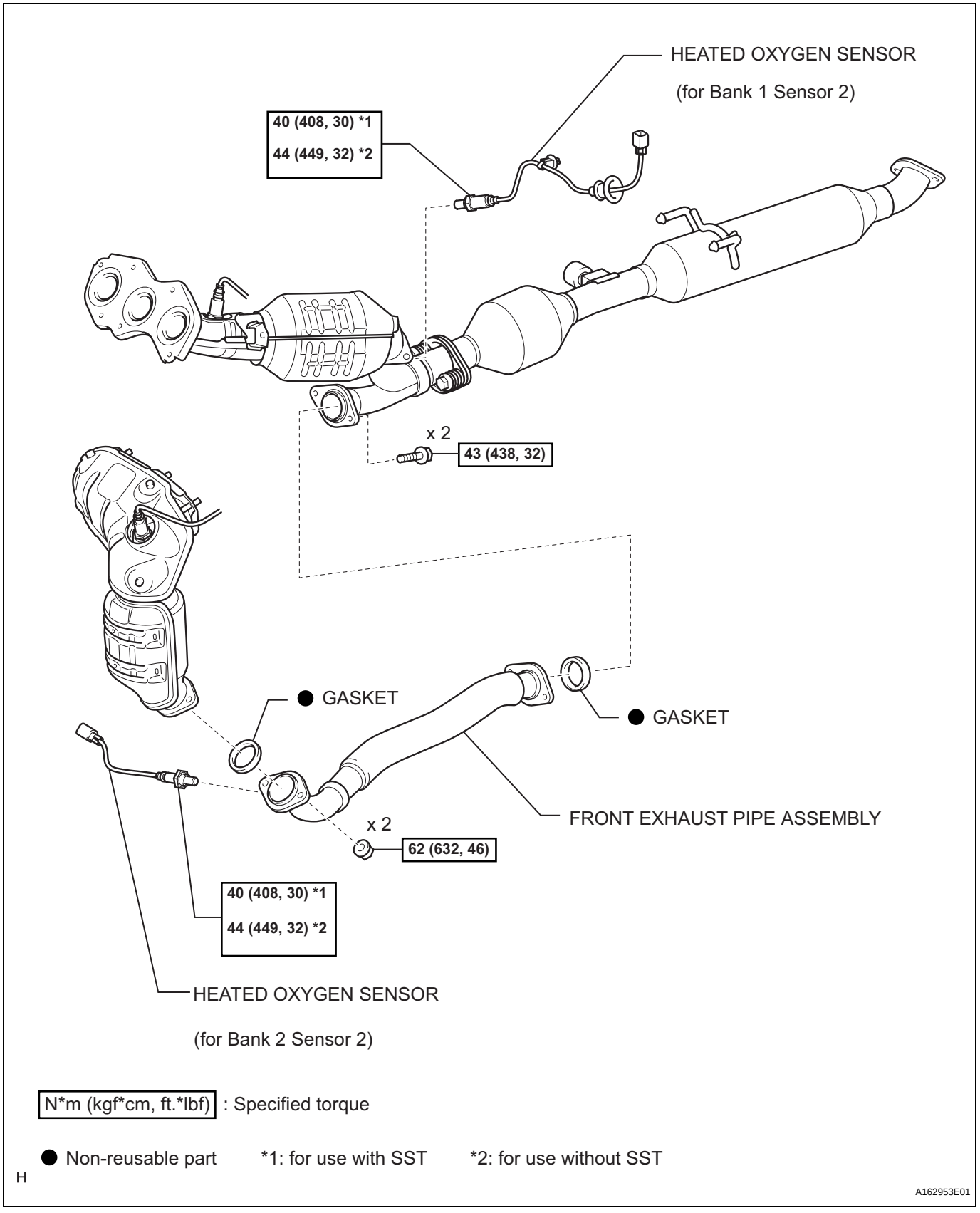

N*m (kgf*cm, ft.*lbf) : Specified torque

● Non-reusable part *1: for use with SST *2: for use without SST

H

A162953E01

EC

REMOVAL

1. **DISCONNECT CABLE FROM NEGATIVE BATTERY TERMINAL**

2. **REMOVE HEATED OXYGEN SENSOR (for Bank 1 Sensor 2)**
   (a) Disconnect the sensor connector under the center console.
   (b) Using SST, remove the heated oxygen sensor.
   SST 09224-00010

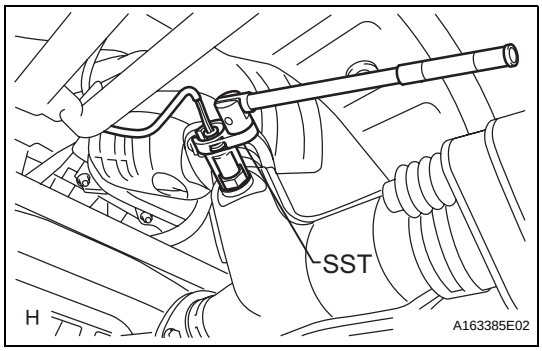

3. **REMOVE FRONT EXHAUST PIPE ASSEMBLY**
   (a) Disconnect the heated oxygen sensor (for Bank 2 Sensor 2) connector.
   (b) Remove the 2 bolts, 4 nuts and front exhaust pipe assembly.

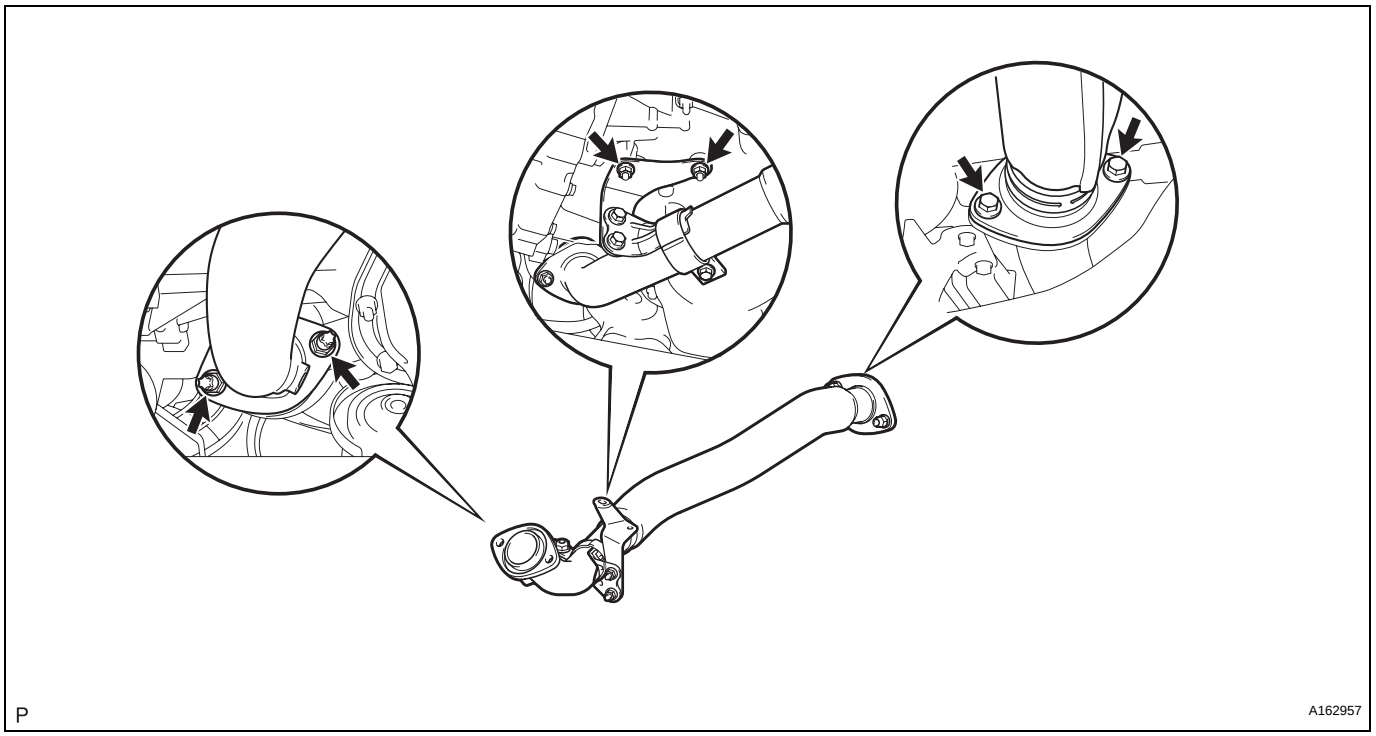

4. **REMOVE HEATED OXYGEN SENSOR (for Bank 2 Sensor 2)**
   (a) Using SST, remove the heated oxygen sensor from the front exhaust pipe assembly.

