INTAKE AIR CONTROL VALVE

COMPONENTS

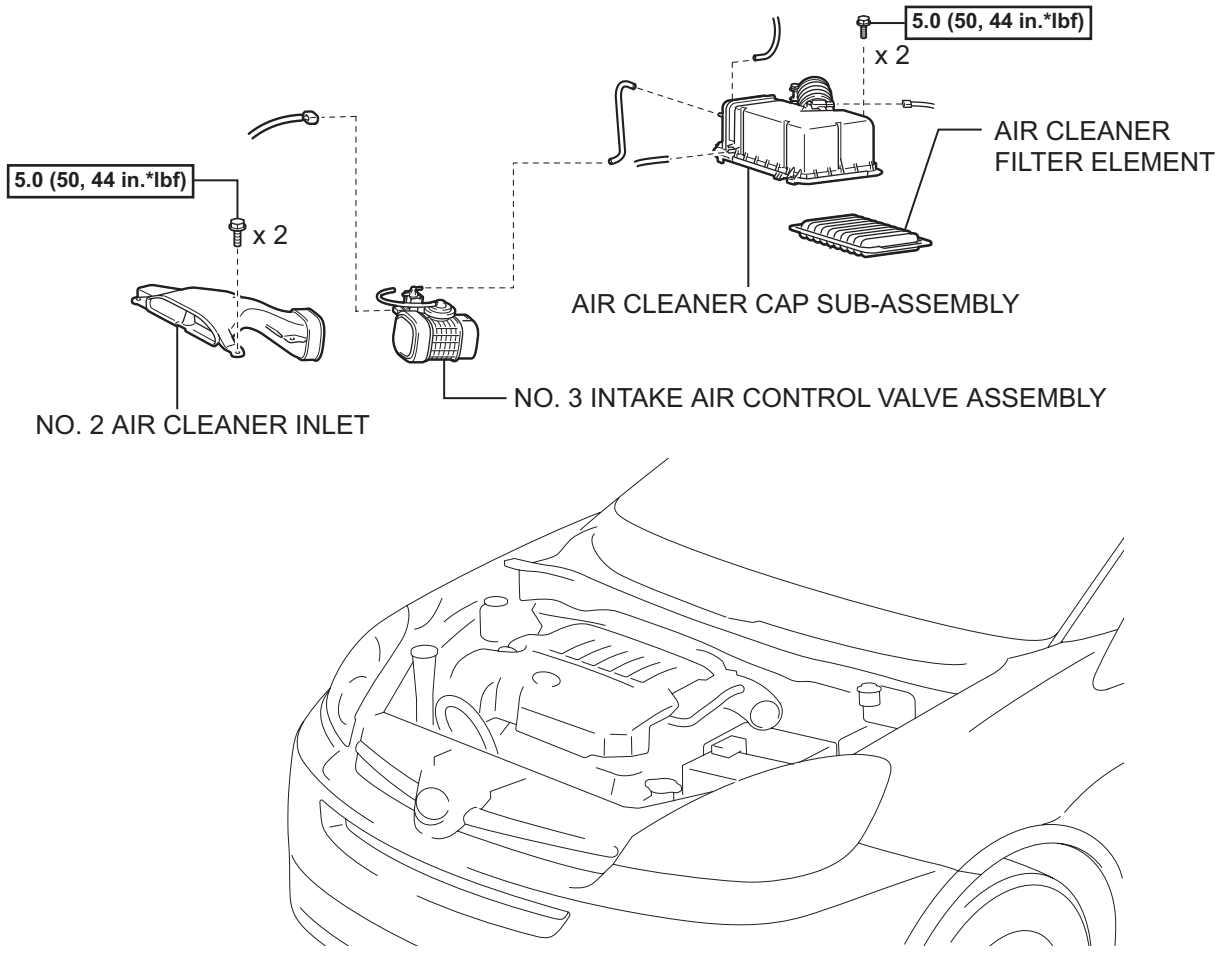

N*m (kgf*cm, ft.*lbf): Specified torque

P

A161847E01

IT

ON-VEHICLE INSPECTION

1. INSPECT INTAKE AIR SURGE TANK ASSEMBLY

(a) Inspection procedure when applying voltage between the terminals:

(1) Disconnect the connector from the intake air control valve.

(2) Apply battery voltage between terminals 1 (-) and 2 (+) of the intake air control valve. Check that a clicking sound is heard from the intake air control valve.
If the result is not as specified, replace the intake air surge tank.

