VACUUM SWITCHING VALVE

COMPONENTS

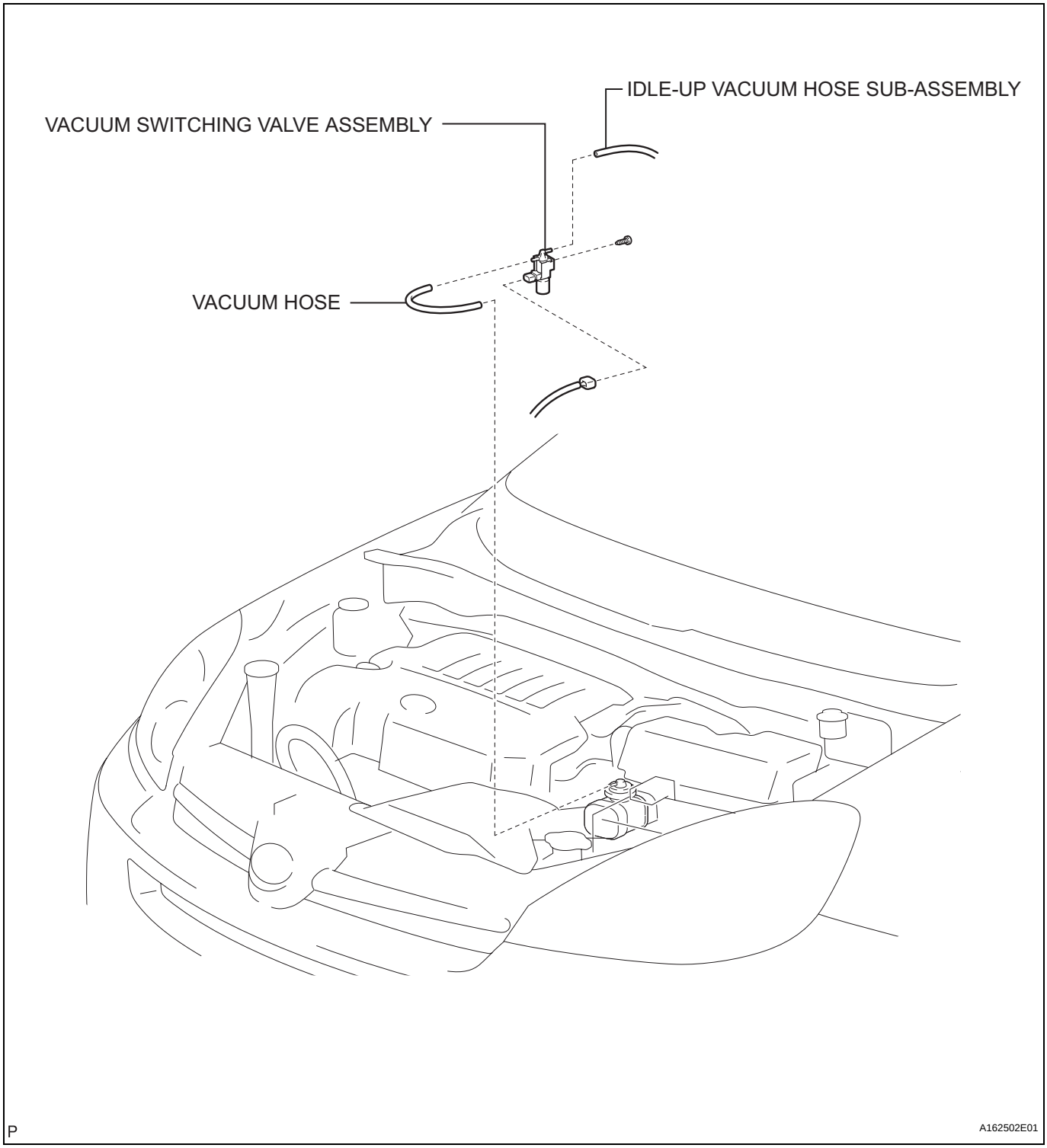

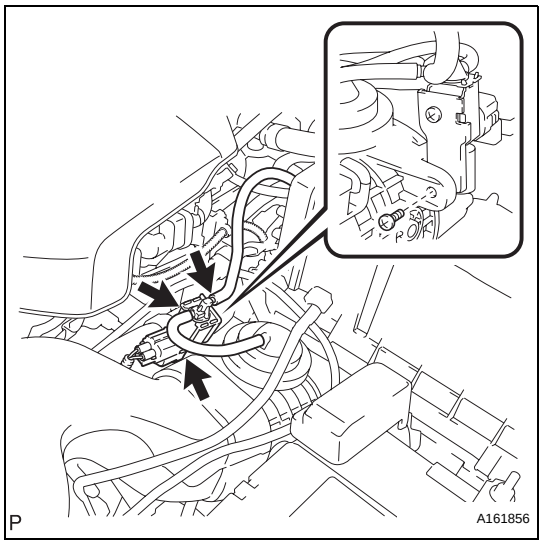

REMOVAL

1. REMOVE VACUUM SWITCHING VALVE ASSEMBLY

(a) Remove the 2 vacuum hoses and vacuum switching valve connector.

(b) Remove the screw and vacuum switching valve.

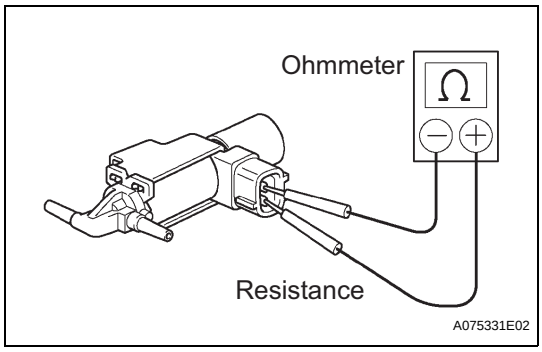

INSPECTION

1. INSPECT VACUUM SWITCHING VALVE ASSEMBLY

(a) Inspect VSV operation.

(1) Using an ohmmeter, measure the resistance according to the value(s) in the table below.

Standard resistance

Terminals	Condition	Specified Condition
1 - 2	20°C (68°F)	37 to 44 Ω

If the result is not as specified, replace the VSV.

(b) Inspect the VSV for ground.

(1) Using an ohmmeter, measure the resistance according to the value(s) in the table below.

Standard resistance

Terminals	Condition	Specified Condition
1 - Body ground	20°C (68°F)	10 kΩ or higher
2 - Body ground	20°C (68°F)	10 kΩ or higher

If the result is not as specified, replace the VSV.

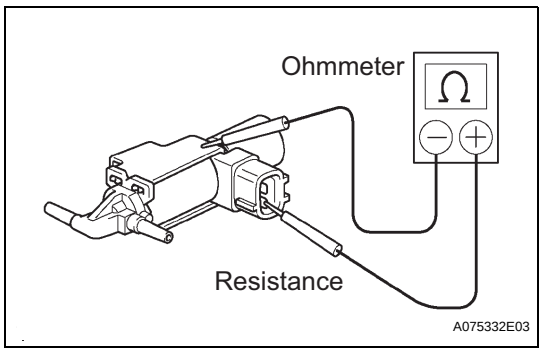

IT

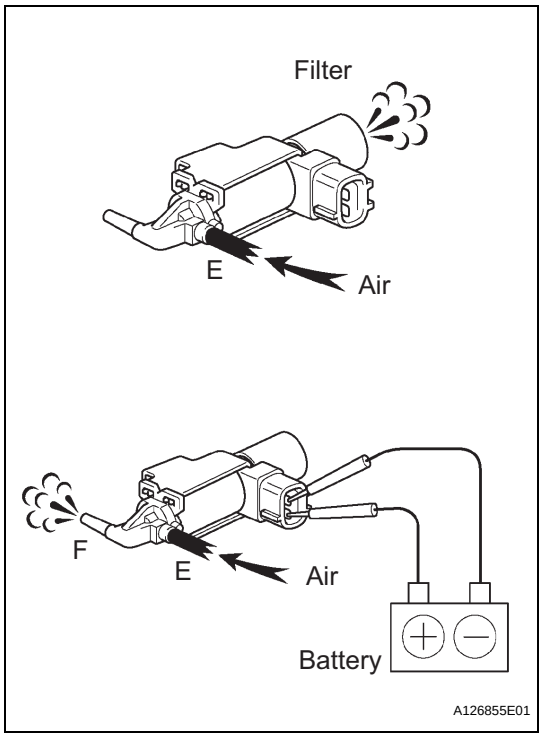

(2) Inspect VSV operation.
- Check that air flows from port E to the filter.
- Apply battery voltage across the terminals.
- Check that air flows from port E to port F.

If operation is not as specified, replace the VSV.