EXHAUST PIPE (for 2WD)

COMPONENTS

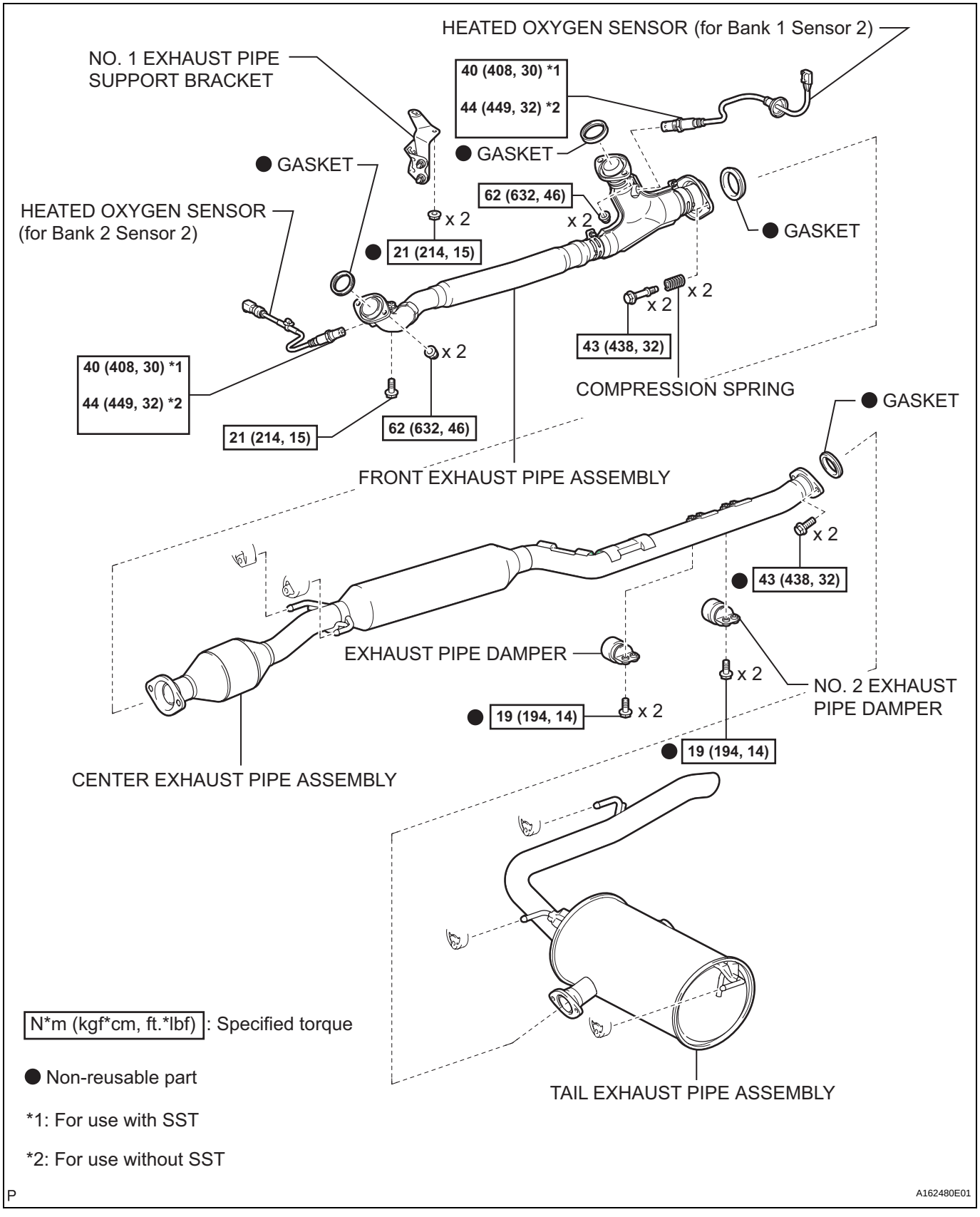

EX

REMOVAL

1. **DISCONNECT CABLE FROM NEGATIVE BATTERY TERMINAL**
2. **REMOVE HEATED OXYGEN SENSOR (for Bank 1 Sensor 2) (See page EC-32)**
3. **REMOVE TAIL EXHAUST PIPE ASSEMBLY**
   (a) Remove the 2 bolts.
   (b) Disconnect the 3 exhaust pipe supports and remove the tail exhaust pipe assembly.

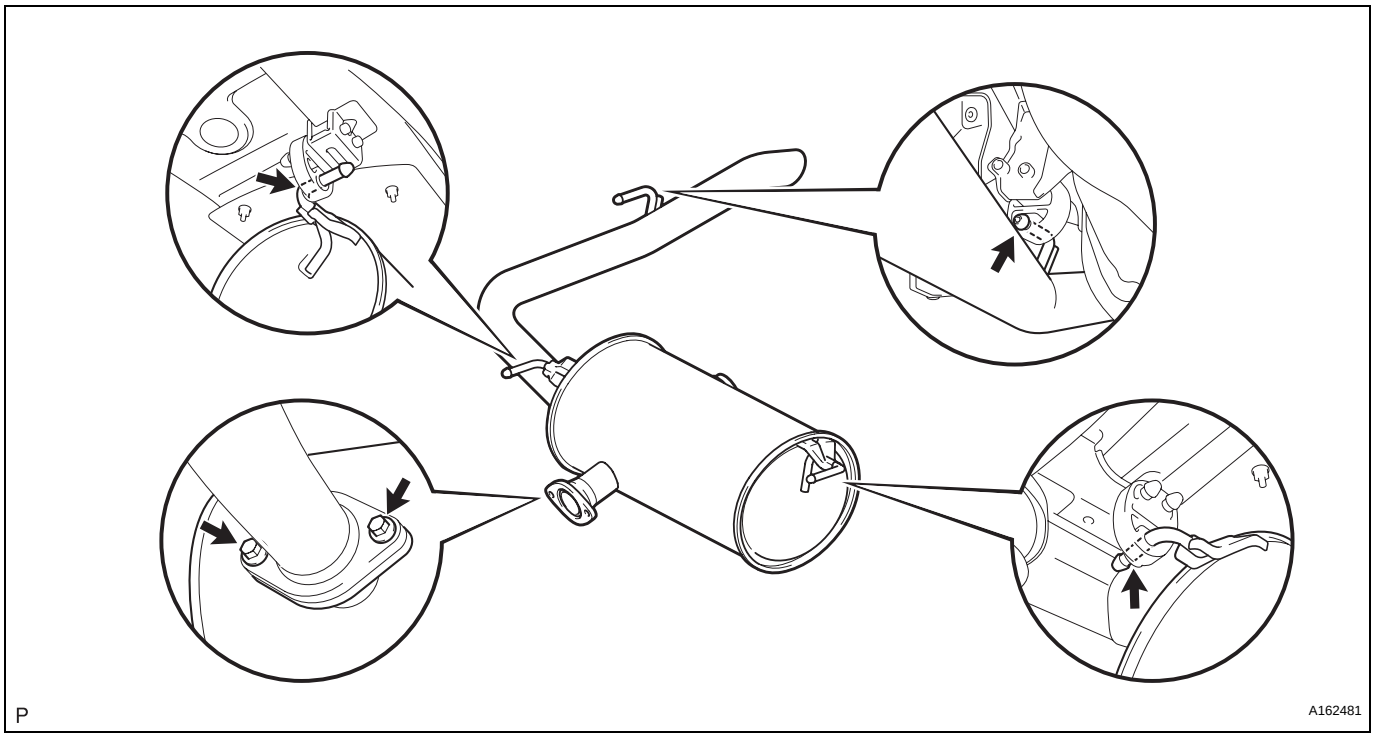

   (c) Remove the gasket from the center exhaust pipe assembly.
4. **REMOVE CENTER EXHAUST PIPE ASSEMBLY**
   (a) Remove the 2 bolts and 2 compression springs.

(b) Disconnect the 2 exhaust pipe supports and remove the center exhaust pipe assembly.

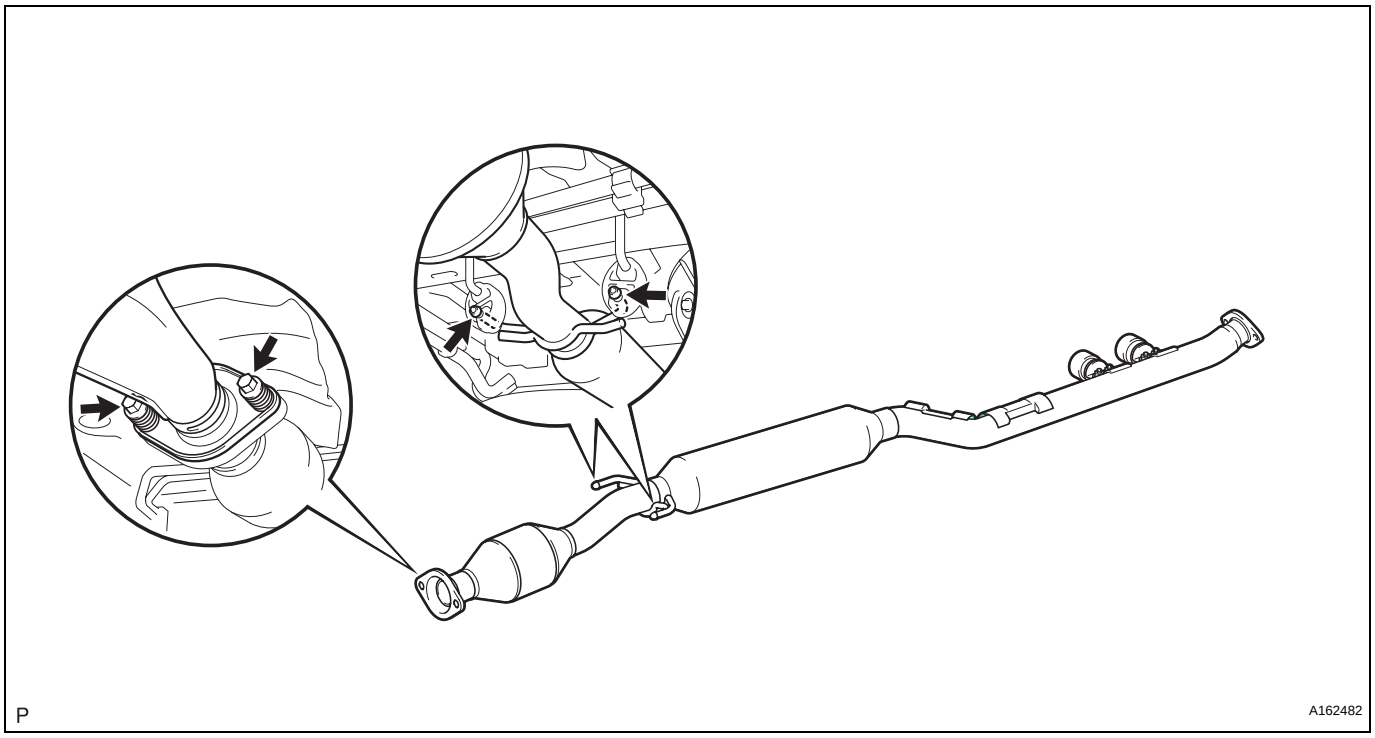

(c) Remove the gasket from the front exhaust pipe assembly.

5. REMOVE FRONT EXHAUST PIPE ASSEMBLY

(a) Disconnect the heated oxygen sensor (for bank 2 sensor 2) connector.

(b) Remove the 6 nuts and front exhaust pipe assembly.

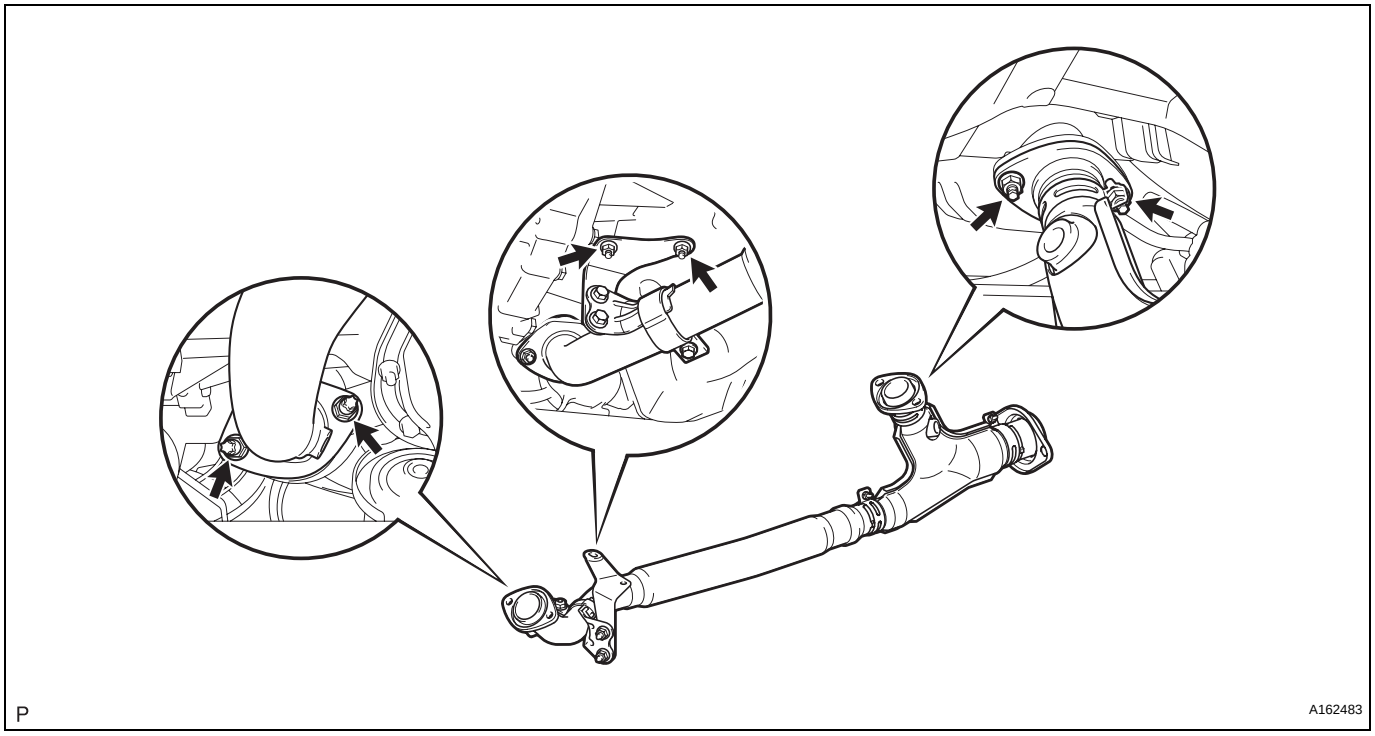

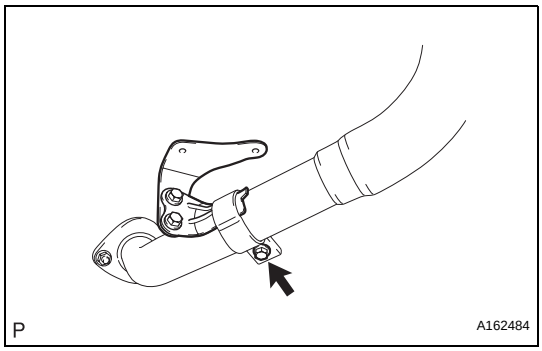

(c) Remove the 2 gaskets from the front exhaust pipe assembly.

6. REMOVE NO. 1 EXHAUST PIPE SUPPORT BRACKET

(a) Remove the bolt and No. 1 exhaust pipe support bracket.

7. REMOVE HEATED OXYGEN SENSOR (for Bank 2 Sensor 2) (See page EC-33)

INSTALLATION

1. **INSTALL HEATED OXYGEN SENSOR (for Bank 2 Sensor 2) (See page EC-34)**

2. **INSTALL FRONT EXHAUST PIPE ASSEMBLY**
   (a) Install 2 new gaskets to the front exhaust pipe assembly.
   (b) Install the front exhaust pipe assembly with the 4 nuts.
   Torque: 62 N*m (632 kgf*cm, 46 ft.*lbf)

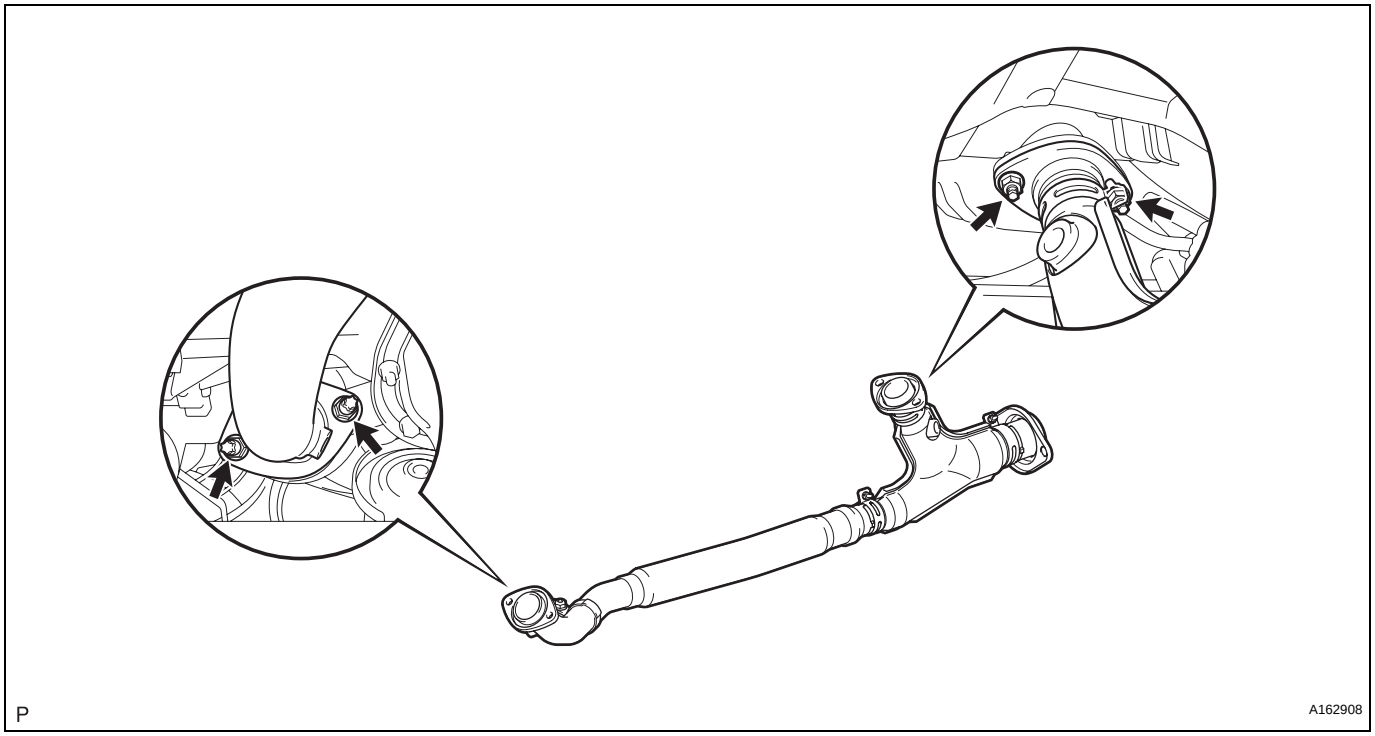

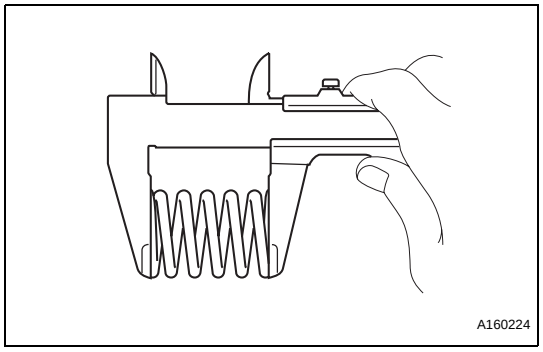

3. **INSTALL CENTER EXHAUST PIPE ASSEMBLY**
   (a) Using a vernier caliper, measure the free length of the compression spring.
   Minimum length:
   38.86 mm (1.5299 in.)
   If the length is less than the minimum, replace the compression spring.

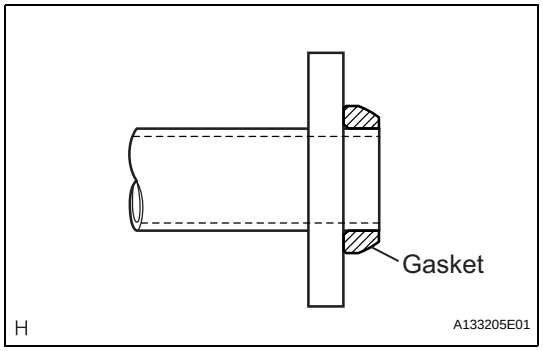

   (b) Install a new gasket by hand so that its surface is flush with the front exhaust pipe assembly.
   NOTICE:
   - **Make sure the gasket is facing the correct direction.**
   - **Do not reuse the old gasket.**
   - **Do not push in the gasket while installing the center exhaust pipe assembly.**
   (c) Connect the 2 exhaust pipe supports, and install the center exhaust pipe assembly.

EX

(d) Install the 2 compression springs and 2 bolts.
Torque: 43 N*m (438 kgf*cm, 32 ft.*lbf)

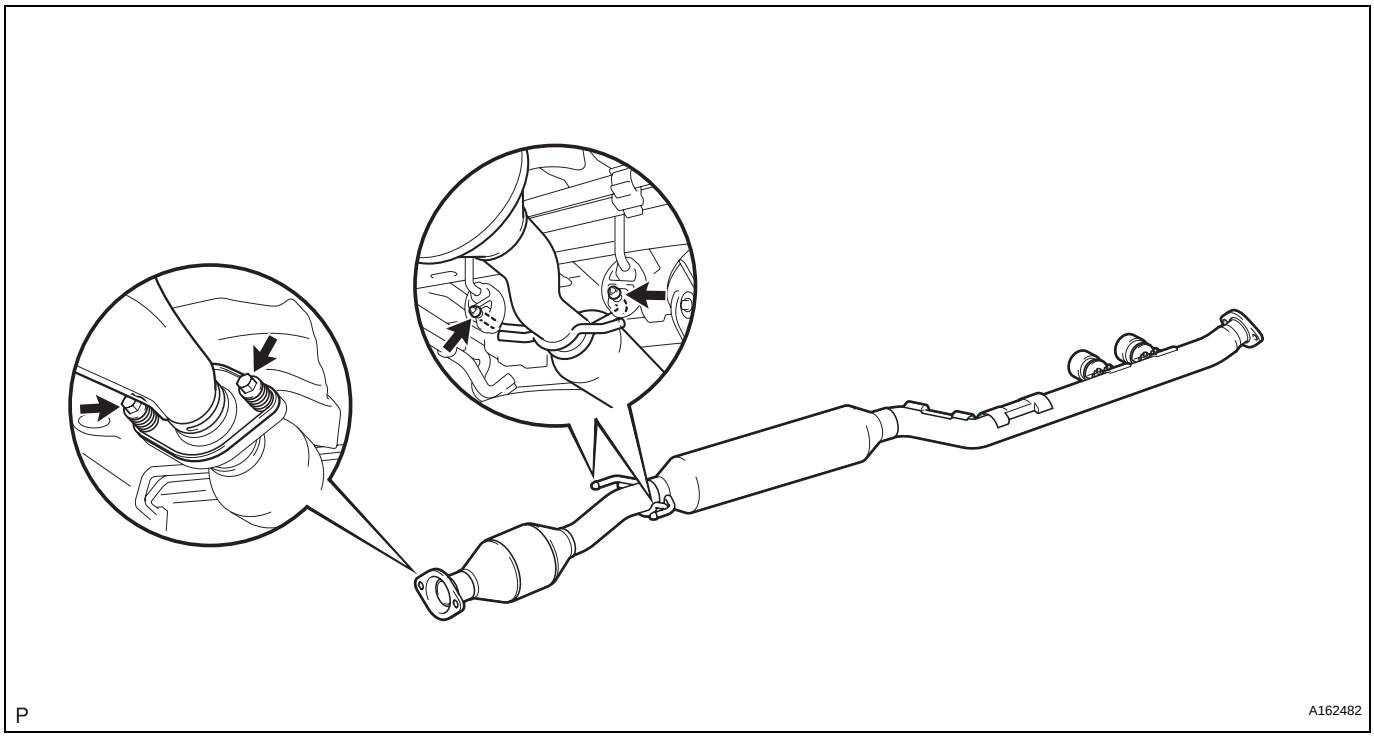

(e) Connect the heated oxygen sensor (for bank 2 sensor 2) connector.

4. INSTALL NO. 1 EXHAUST PIPE SUPPORT BRACKET

(a) Install the No. 1 exhaust pipe support bracket to oil pan sub-assembly with 2 new nuts.
Torque: 21 N*m (214 kgf*cm, 15 ft.*lbf)

(b) Loosen the No. 1 exhaust pipe support bracket bolts.

(c) Install the clamp to No. 1 exhaust pipe support bracket.

(d) Retighten the No. 1 exhaust pipe support bracket bolts.
Torque: 21 N*m (214 kgf*cm, 15 ft.*lbf)

(e) Install the clamp with the bolt.
Torque: 21 N*m (214 kgf*cm, 15 ft.*lbf)

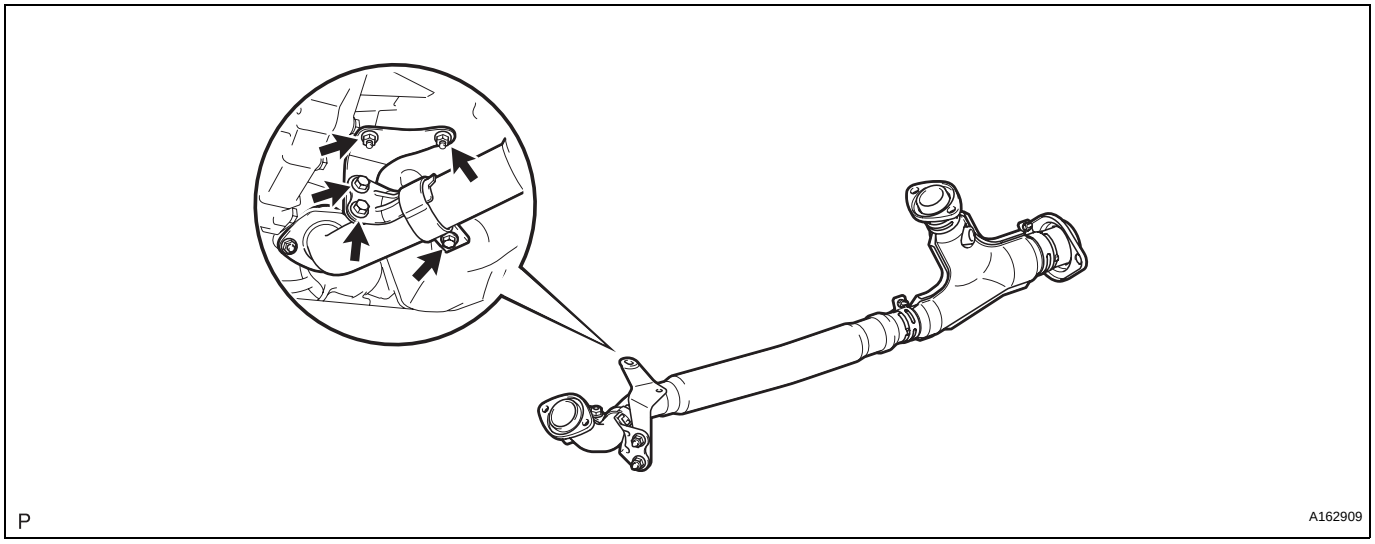

5. **INSTALL TAIL EXHAUST PIPE ASSEMBLY**
   (a) Install a new gasket to the center exhaust pipe assembly.
   (b) Connect the 3 exhaust pipe supports, and install the tail exhaust pipe assembly.
   (c) Install 2 new bolts.
   Torque: 43 N*m (438 kgf*cm, 32 ft.*lbf)

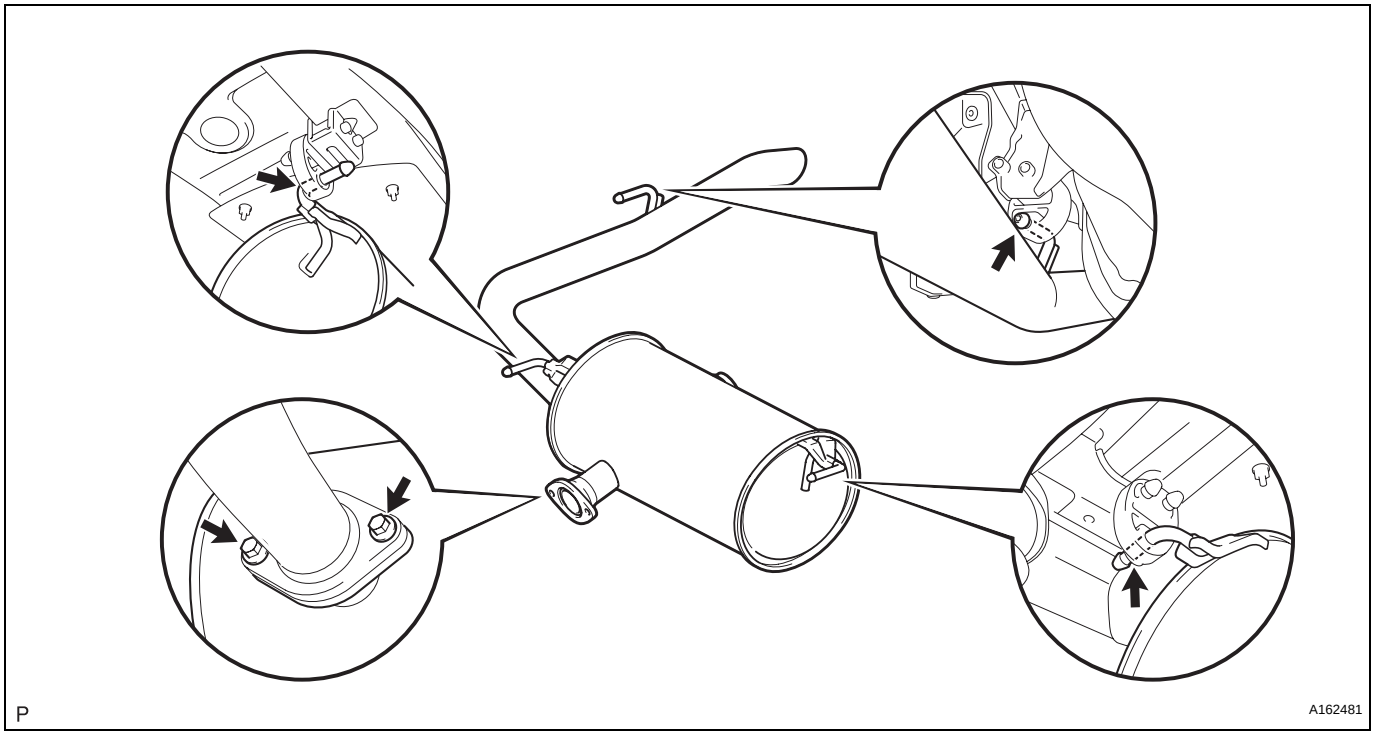

6. **INSTALL HEATED OXYGEN SENSOR (for Bank 1 Sensor 2) (See page EC-36)**
7. **CONNECT CABLE TO NEGATIVE BATTERY TERMINAL**
8. **INSPECT FOR EXHAUST GAS LEAK**
   If exhaust gas is leaking, repair the leak. Replace damaged parts as necessary.