EXHAUST PIPE (for 4WD)

COMPONENTS

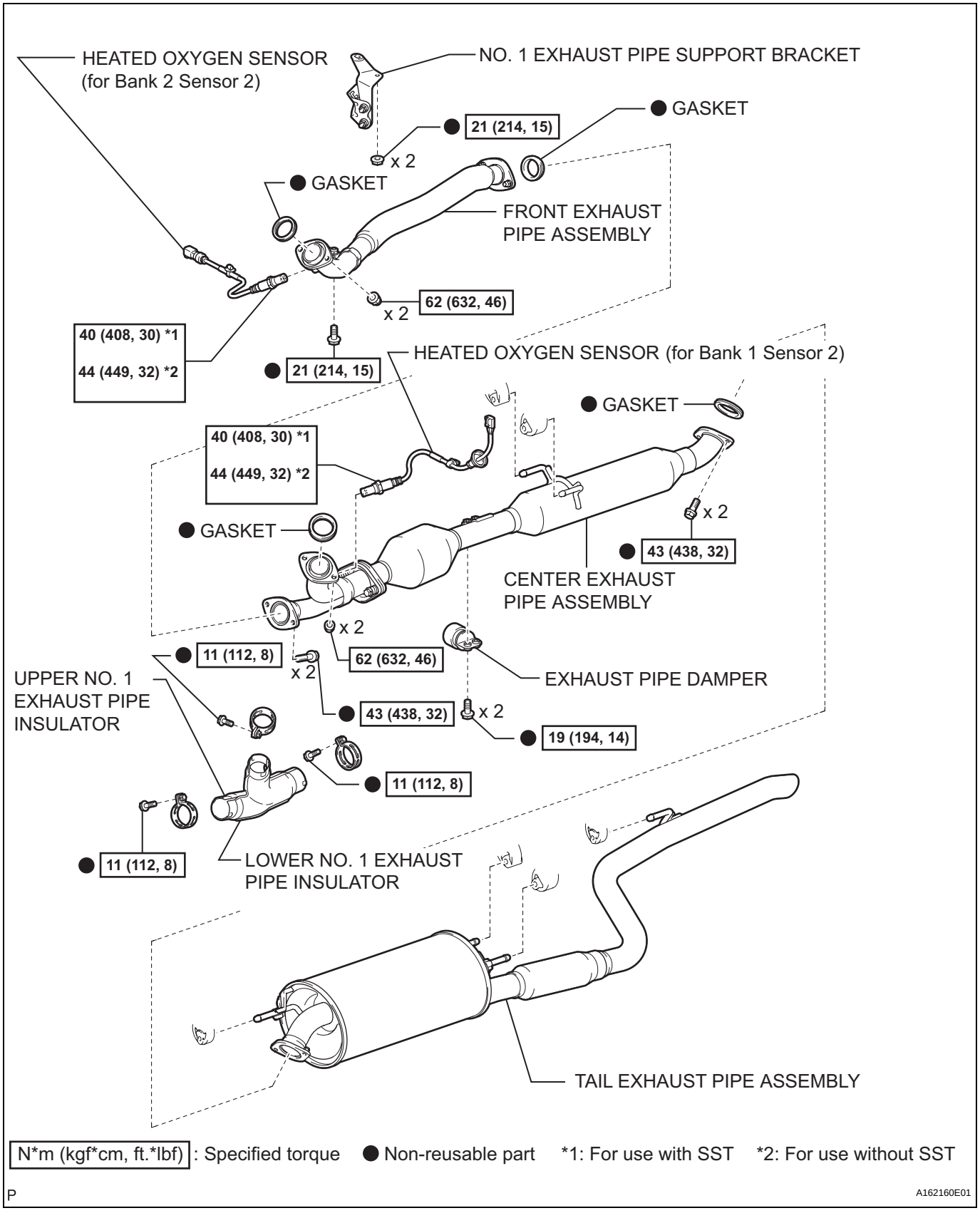

N*m (kgf*cm, ft.*lbf) : Specified torque ● Non-reusable part *1: For use with SST *2: For use without SST

P A162160E01

EX

REMOVAL

1. **DISCONNECT CABLE FROM NEGATIVE BATTERY TERMINAL**
2. **REMOVE HEATED OXYGEN SENSOR (for Bank 1 Sensor 2) (See page EC-38)**
3. **REMOVE TAIL EXHAUST PIPE ASSEMBLY**
   (a) Remove the 2 bolts.
   (b) Disconnect the 4 exhaust pipe supports and remove the tail exhaust pipe assembly.

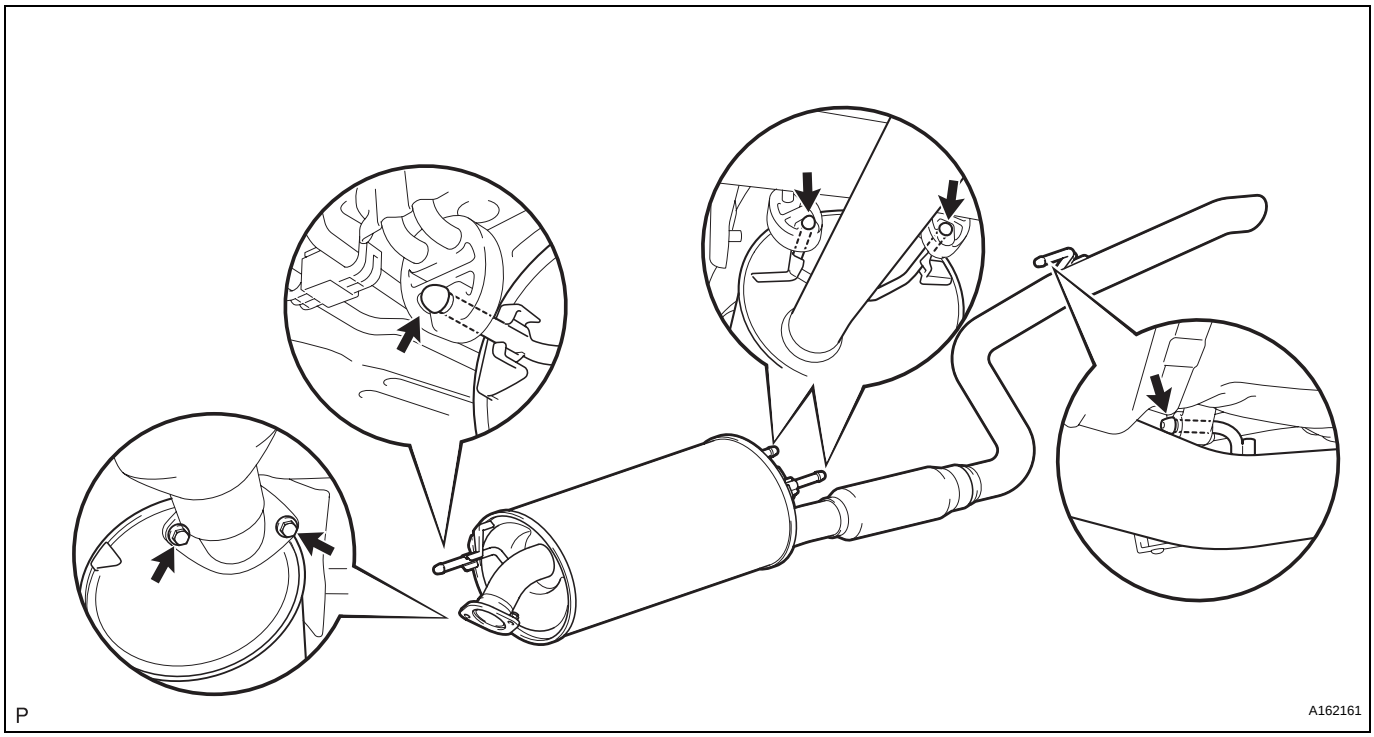

   (c) Remove the gasket from the center exhaust pipe assembly.
4. **REMOVE CENTER EXHAUST PIPE ASSEMBLY**
   (a) Remove the 2 bolts and 2 nuts.

(b) Disconnect the 2 exhaust pipe supports and remove the center exhaust pipe assembly.

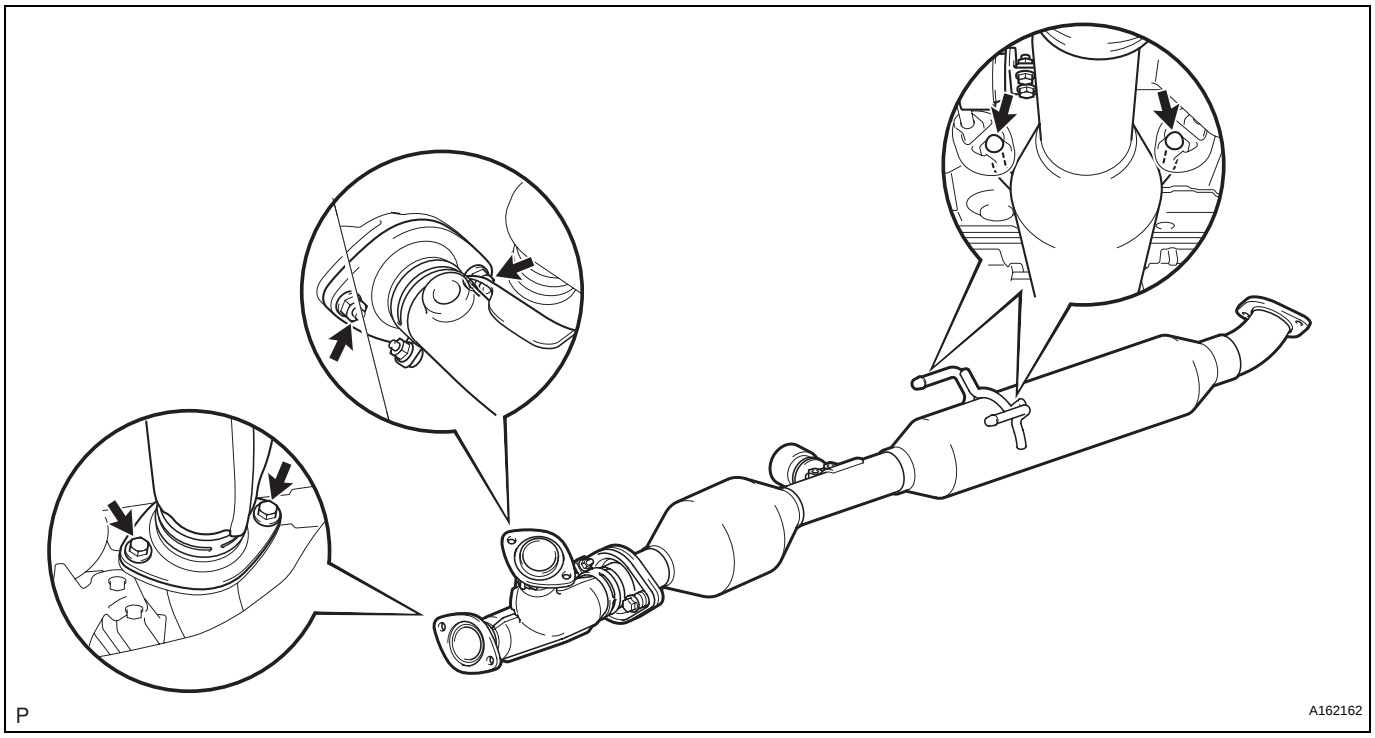

(c) Remove the gaskets from the center exhaust pipe assembly and the front exhaust pipe assembly.

5. REMOVE FRONT EXHAUST PIPE ASSEMBLY

(a) Disconnect the heated oxygen sensor (for bank 2 sensor 2) connector.

(b) Remove the 4 nuts and front exhaust pipe assembly.

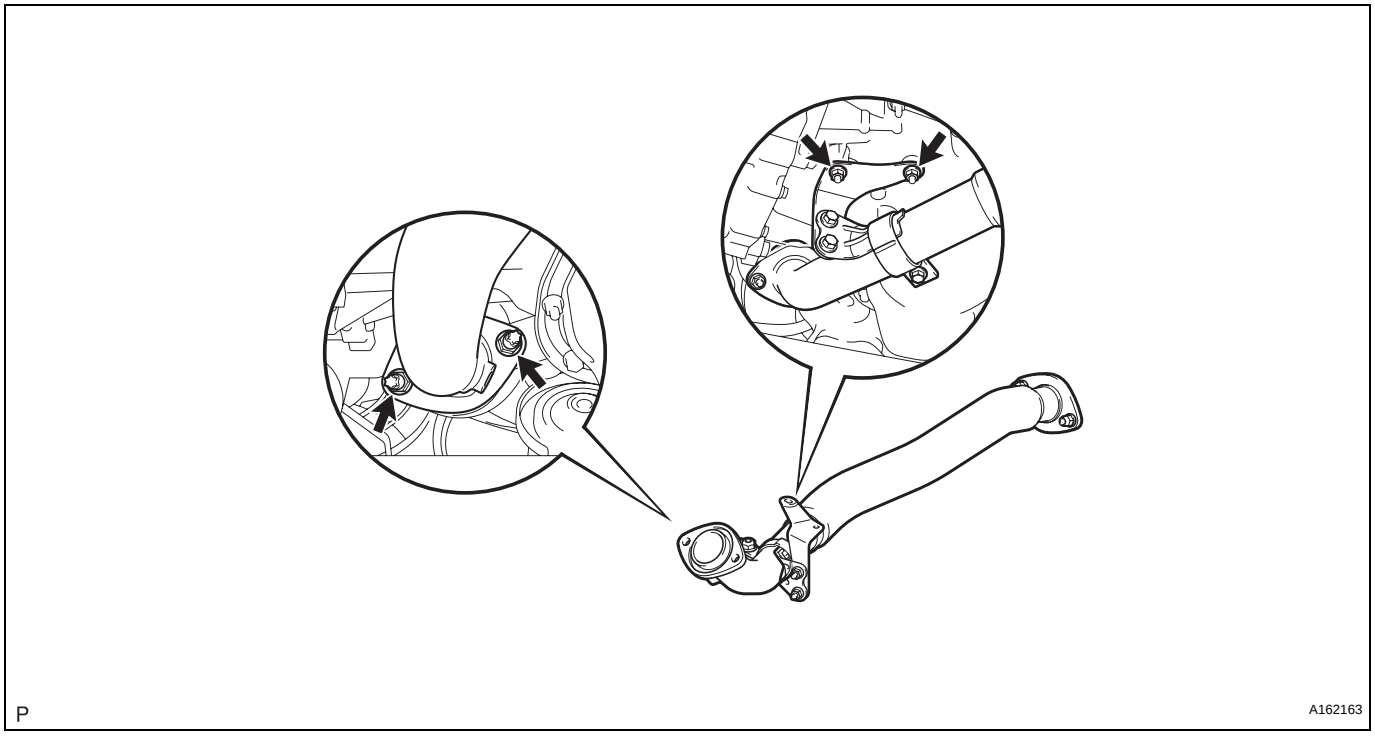

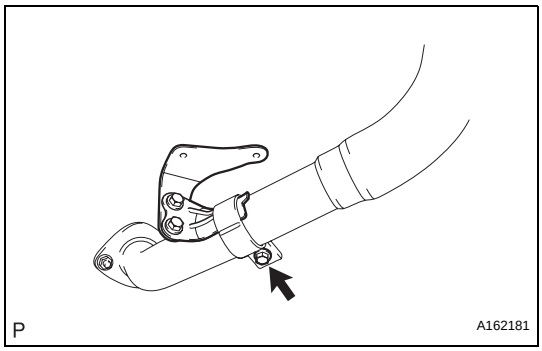

(c) Remove the gasket from the front exhaust pipe assembly.

6. REMOVE NO. 1 EXHAUST PIPE SUPPORT BRACKET

(a) Remove the bolt and No. 1 exhaust pipe support bracket.

7. REMOVE HEATED OXYGEN SENSOR (for Bank 2 Sensor 2) (See page EC-38)

INSTALLATION

1. **INSTALL HEATED OXYGEN SENSOR (for Bank 2 Sensor 2) (See page EC-39)**

2. **INSTALL FRONT EXHAUST PIPE ASSEMBLY**
   (a) Install a new gasket to the front exhaust pipe assembly.
   (b) Install the front exhaust pipe assembly with the 2 nuts.
   Torque: 62 N*m (632 kgf*cm, 46 ft.*lbf)

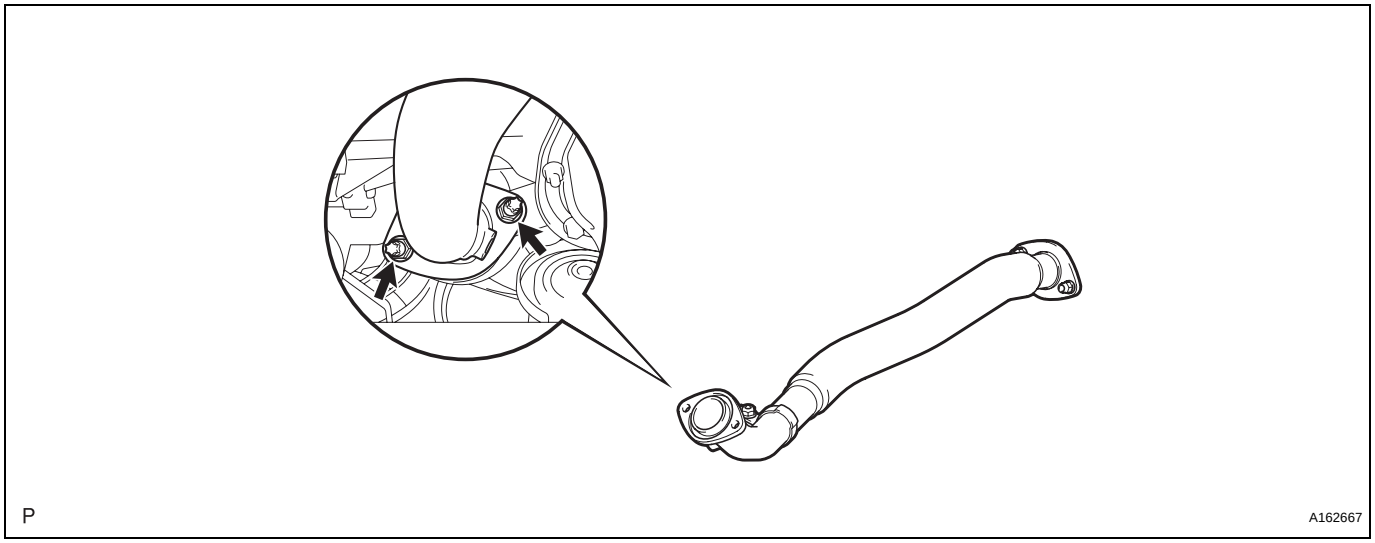

3. **INSTALL CENTER EXHAUST PIPE ASSEMBLY**
   (a) Install 2 new gaskets to the center exhaust pipe assembly.
   (b) Connect the 2 exhaust pipe supports, and install the center exhaust pipe assembly.
   (c) Install 2 new bolts and 2 nuts.
   Torque: Bolt
   43 N*m (438 kgf*cm, 32 ft.*lbf)
   Nut
   62 N*m (632 kgf*cm, 46 ft.*lbf)

EX

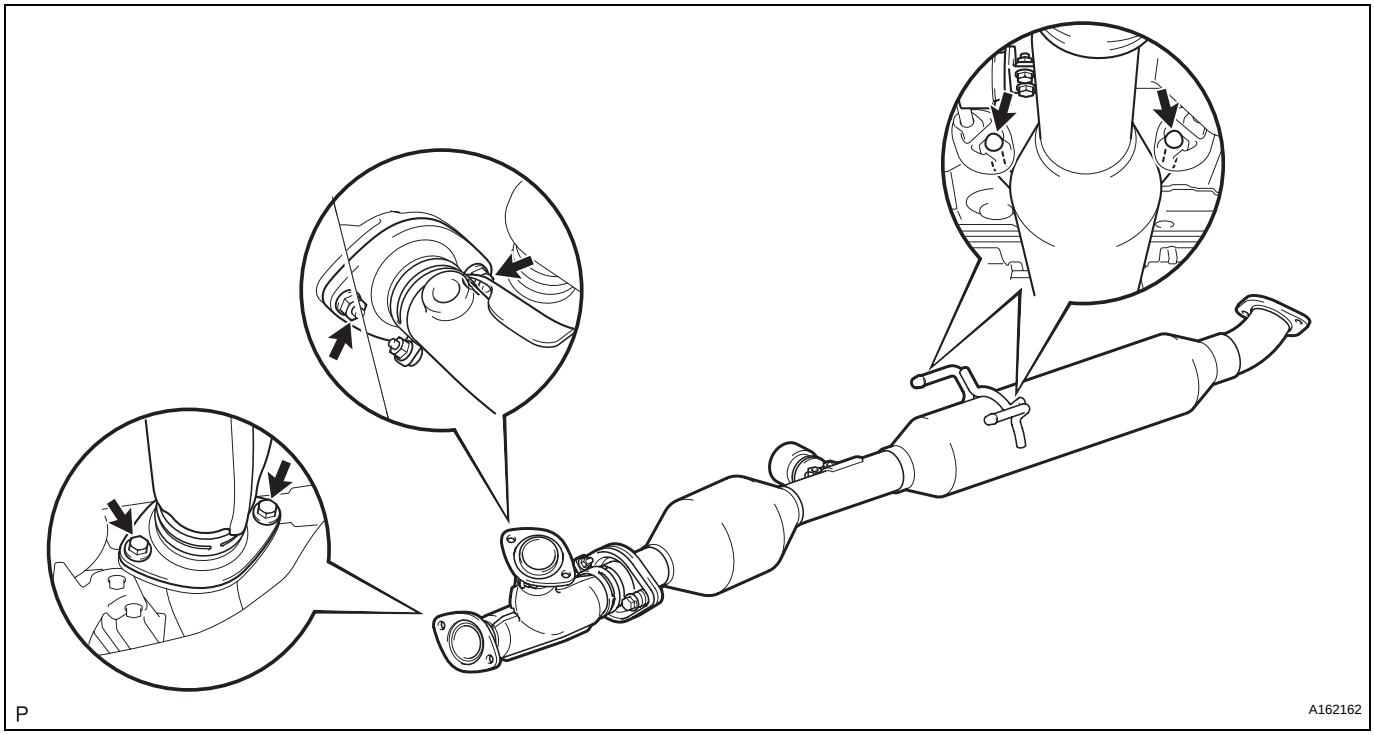

EX

4. INSTALL NO. 1 EXHAUST PIPE SUPPORT BRACKET

(a) Install the No. 1 exhaust pipe support bracket to oil pan sub-assembly with 2 new nuts.
Torque: 21 N*m (214 kgf*cm, 15 ft.*lbf)

(b) Loosen the No. 1 exhaust pipe support bracket bolts.

(c) Install the clamp to No. 1 exhaust pipe support bracket.

(d) Retighten the No. 1 exhaust pipe support bracket bolts.
Torque: 21 N*m (214 kgf*cm, 15 ft.*lbf)

(e) Install the clamp with a new bolt.
Torque: 21 N*m (214 kgf*cm, 15 ft.*lbf)

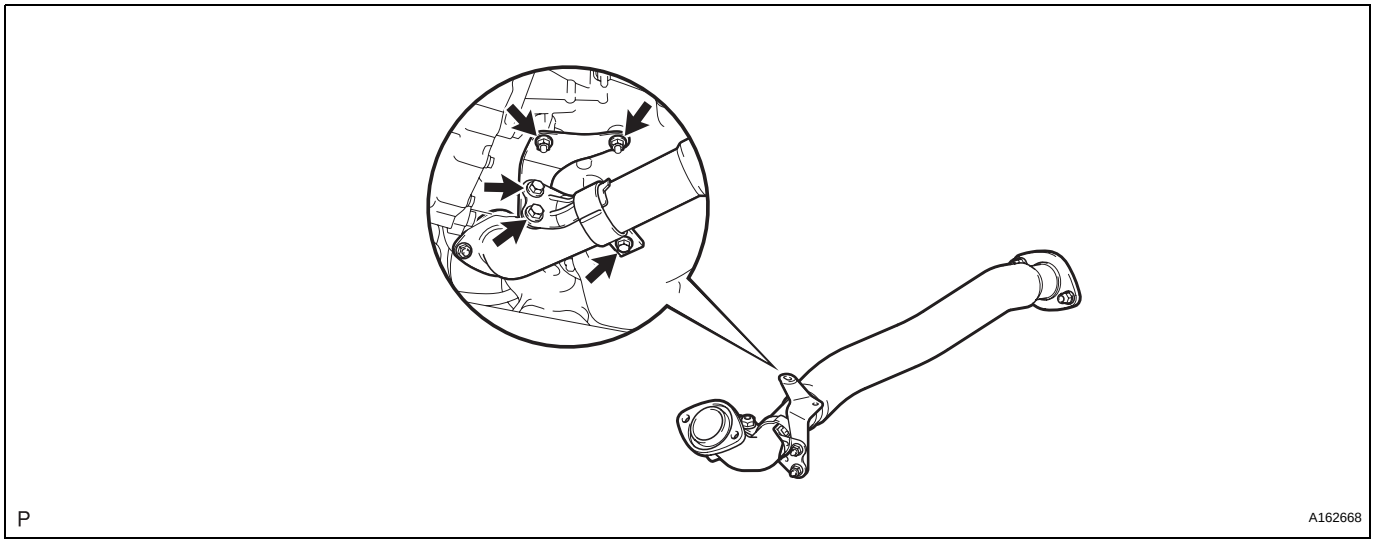

(f) Connect the heated oxygen sensor (for bank 2 sensor 2) connector.

5. **INSTALL TAIL EXHAUST PIPE ASSEMBLY**
   (a) Install a new gasket to the center exhaust pipe assembly.
   (b) Connect the 4 exhaust pipe supports, and install the tail exhaust pipe assembly.
   (c) Install 2 new bolts.
   Torque: 43 N*m (438 kgf*cm, 32 ft.*lbf)

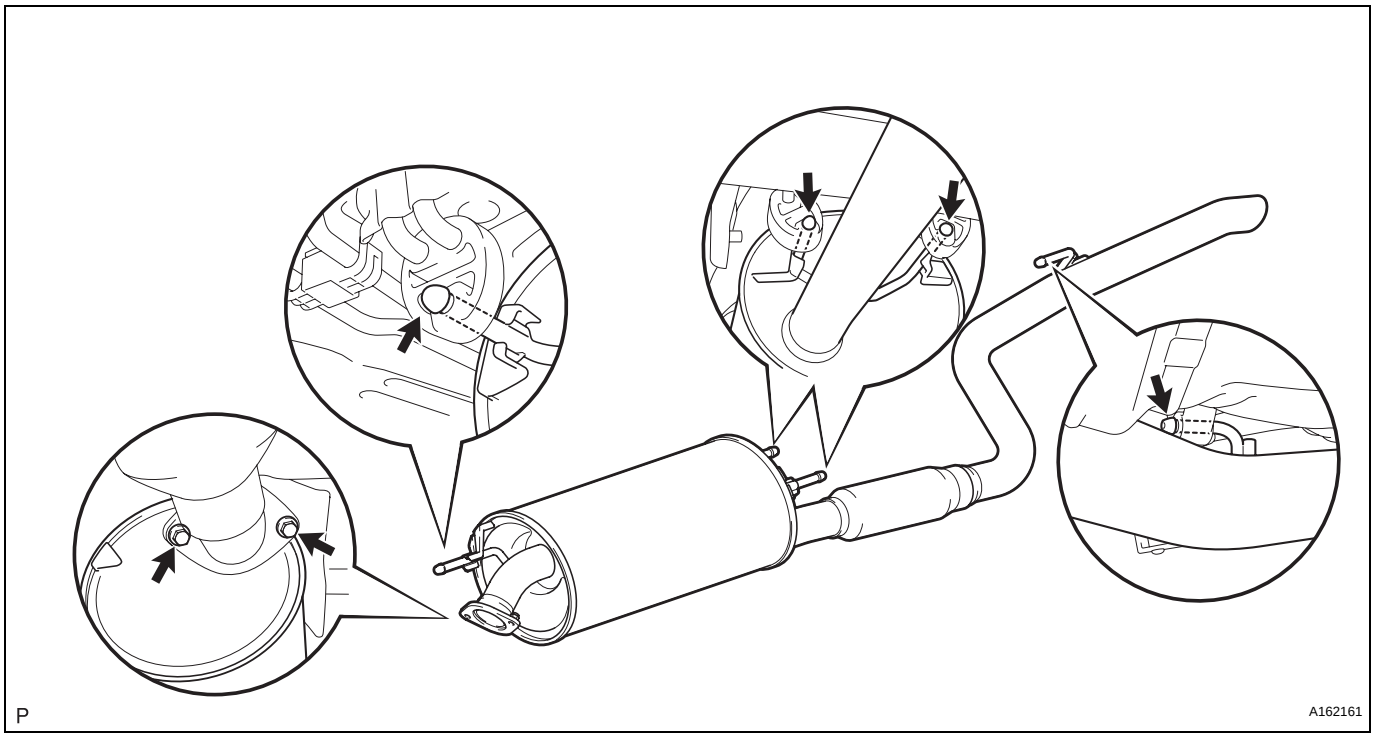

6. **INSTALL HEATED OXYGEN SENSOR (for Bank 1 Sensor 2) (See page EC-41)**

7. **CONNECT CABLE TO NEGATIVE BATTERY TERMINAL**

8. **INSPECT FOR EXHAUST GAS LEAK**
   If exhaust gas is leaking, repair the leak. Replace damaged parts as necessary.

EX