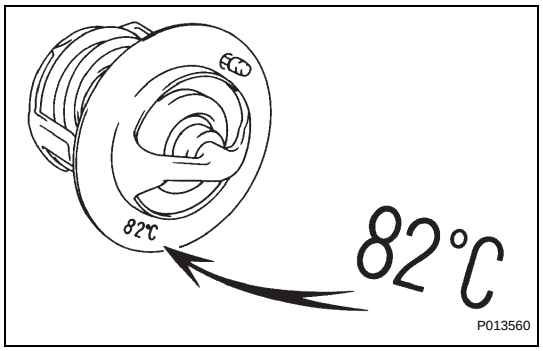

INSPECTION

1. INSPECT THERMOSTAT

(a) Inspect the thermostat.
HINT:
The valve opening temperature is inscribed on the thermostat.

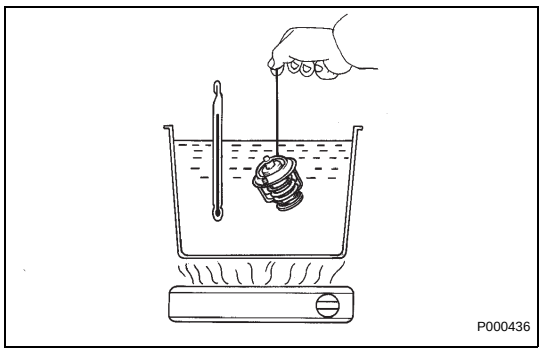

(b) Immerse the thermostat in water and gradually heat the water.

(c) Check the valve opening temperature.
Valve opening temperature:
80 to 84°C (176 to 183°F)
If the valve opening temperature is not as specified, replace the thermostat.

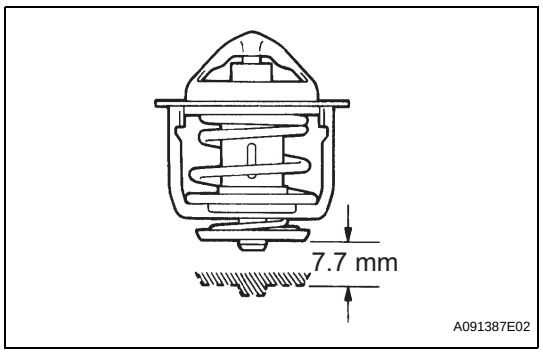

(d) Check the valve lift.
Valve lift:
7.7 mm (0.303 in.) or more at 95°C (203°F)
If the valve lift is not as specified, replace the thermostat.

(e) Check that the valve is fully closed when the thermostat is at low temperatures (below 40°C (104°F)).
If it is not fully closed, replace the thermostat.

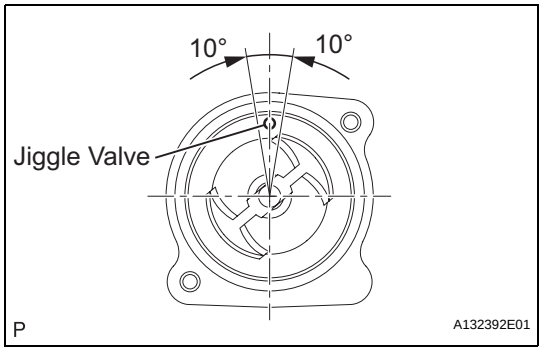

INSTALLATION

1. INSTALL THERMOSTAT

(a) Install a new gasket to the thermostat.

(b) Install the thermostat with the jiggle valve facing up.
HINT:
The jiggle valve may be set within 10° on either side of the prescribed position.

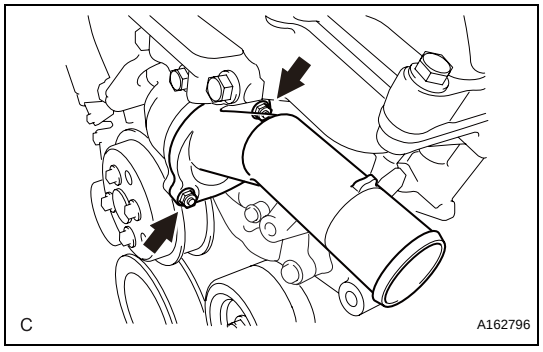

2. INSTALL WATER INLET

(a) Install the water inlet with the 2 nuts .
Torque: 10 N*m (102 kgf*cm, 7 ft.*lbf)

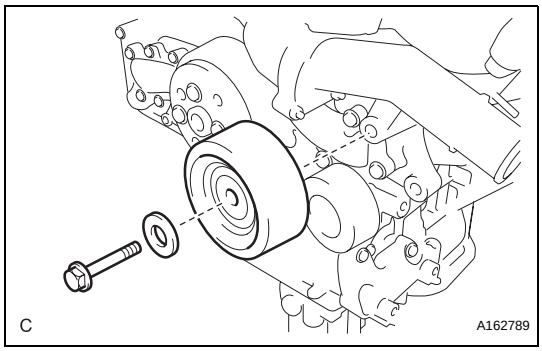

3. **INSTALL NO. 2 IDLER PULLEY SUB-ASSEMBLY**
   (a) Install the idler pulley cover plate and idler pulley sub-assembly with the bolt.
   Torque: 43 N*m (438 kgf*cm, 32 ft.*lbf)

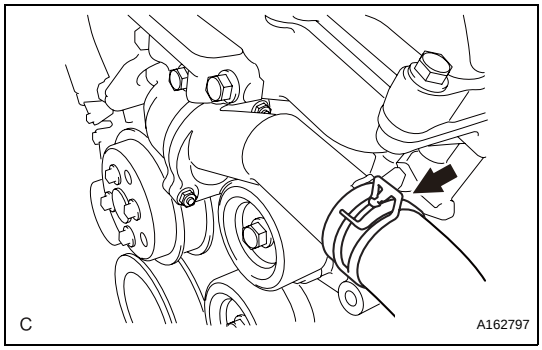

4. **CONNECT NO. 2 RADIATOR HOSE**
   (a) Connect the No. 2 radiator hose to the engine.
5. **INSTALL V-RIBBED BELT (See page EM-7)**
6. **INSTALL FRONT FENDER APRON SEAL RH**
7. **INSTALL FRONT WHEEL RH**
8. **ADD ENGINE COOLANT (See page CO-7)**
9. **INSTALL NO. 1 ENGINE UNDER COVER (See page EM-63)**
10. **INSPECT FOR COOLANT LEAK (See page CO-1)**
11. **INSTALL V-BANK COVER SUB-ASSEMBLY (See page EM-63)**