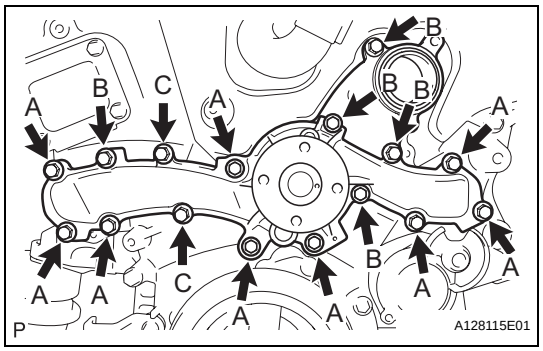

INSTALLATION

1. INSTALL WATER PUMP ASSEMBLY

(a) Install a new water pump gasket and the water pump assembly with the 16 bolts.

Torque: Bolt A
21 N*m (214 kgf*cm, 15 ft.*lbf)
Bolts B and C
9.1 N*m (93 kgf*cm, 81 in.*lbf)

NOTICE:

- **Make sure that there is no oil on the threads of bolts A.**
- **Be sure to replace 2 bolts C with new ones or reuse them after applying adhesive 1344.**
  Adhesive:
  Toyota Genuine Adhesive 1344, Three Bond 1344 or equivalent

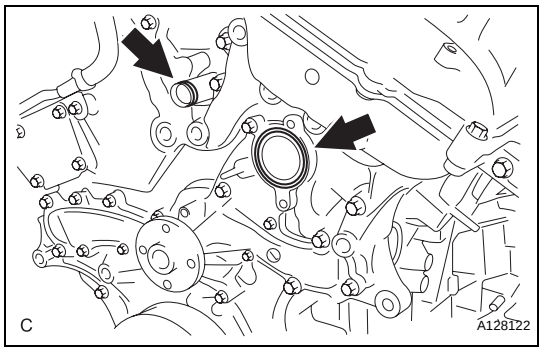

2. INSTALL WATER INLET HOUSING

(a) Install a new water inlet housing No. 1 gasket and water outlet pipe O-ring.

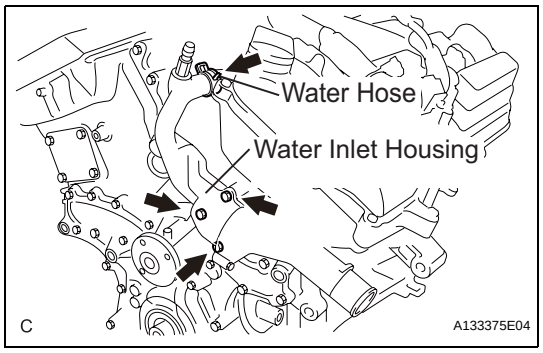

(b) Install the water inlet housing with the 2 bolts and nut.

Torque: 10 N*m (102 kgf*cm, 7 ft.*lbf)

NOTICE:

Be careful not to allow the O-ring to get caught between the parts.

(c) Connect the water hose.

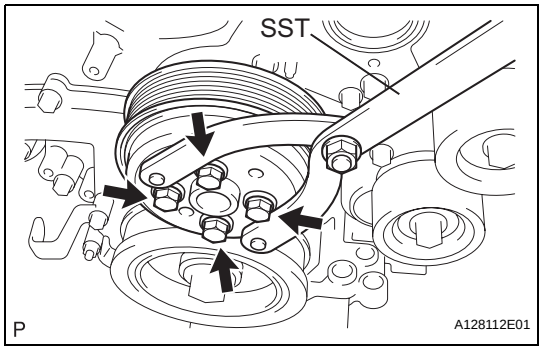

3. INSTALL WATER PUMP PULLEY

(a) Temporarily install the water pump pulley with the 4 bolts.

(b) Using SST, hold the water pump pulley.

SST 09960-10010 (09962-01000, 09963-00700)

(c) Tighten the 4 bolts.

Torque: 21 N*m (214 kgf*cm, 15 ft.*lbf)

CO

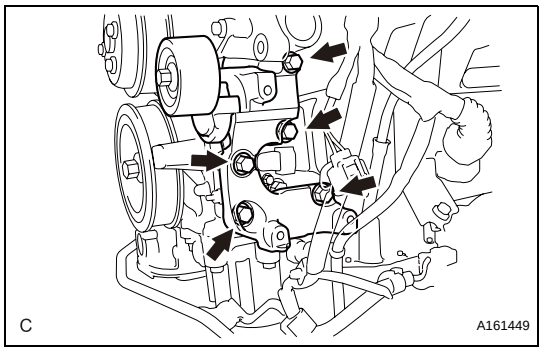

4. **INSTALL V-RIBBED BELT TENSIONER ASSEMBLY**
   (a) Install the V-ribbed belt tensioner assembly with the 5 bolts.
   Torque: 43 N*m (438 kgf*cm, 32 ft.*lbf)

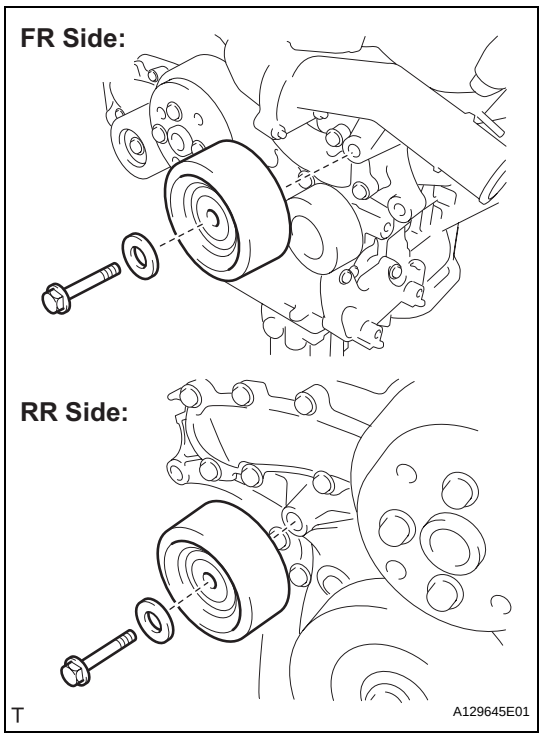

5. **INSTALL NO. 2 IDLER PULLEY SUB-ASSEMBLY**
   (a) Install the 2 idler pulley cover plates and idler pulley sub-assemblies with the 2 bolts.
   Torque: 43 N*m (438 kgf*cm, 32 ft.*lbf)
6. **INSTALL NO. 1 ENGINE FRONT MOUNTING BRACKET LH (See page EM-45)**
7. **INSTALL GENERATOR ASSEMBLY (See page CH-26)**
8. **INSTALL COMPRESSOR AND MAGNETIC CLUTCH (See page AC-231)**
9. **INSTALL ENGINE HANGERS (See page EM-50)**
10. **REMOVE ENGINE STAND**
11. **INSTALL ENGINE ASSEMBLY WITH TRANSAXLE**
    HINT:
    See page EM-44
12. **ADD ENGINE COOLANT (See page CO-7)**
13. **INSPECT FOR COOLANT LEAK (See page CO-1)**

CO