THERMOSTAT

COMPONENTS

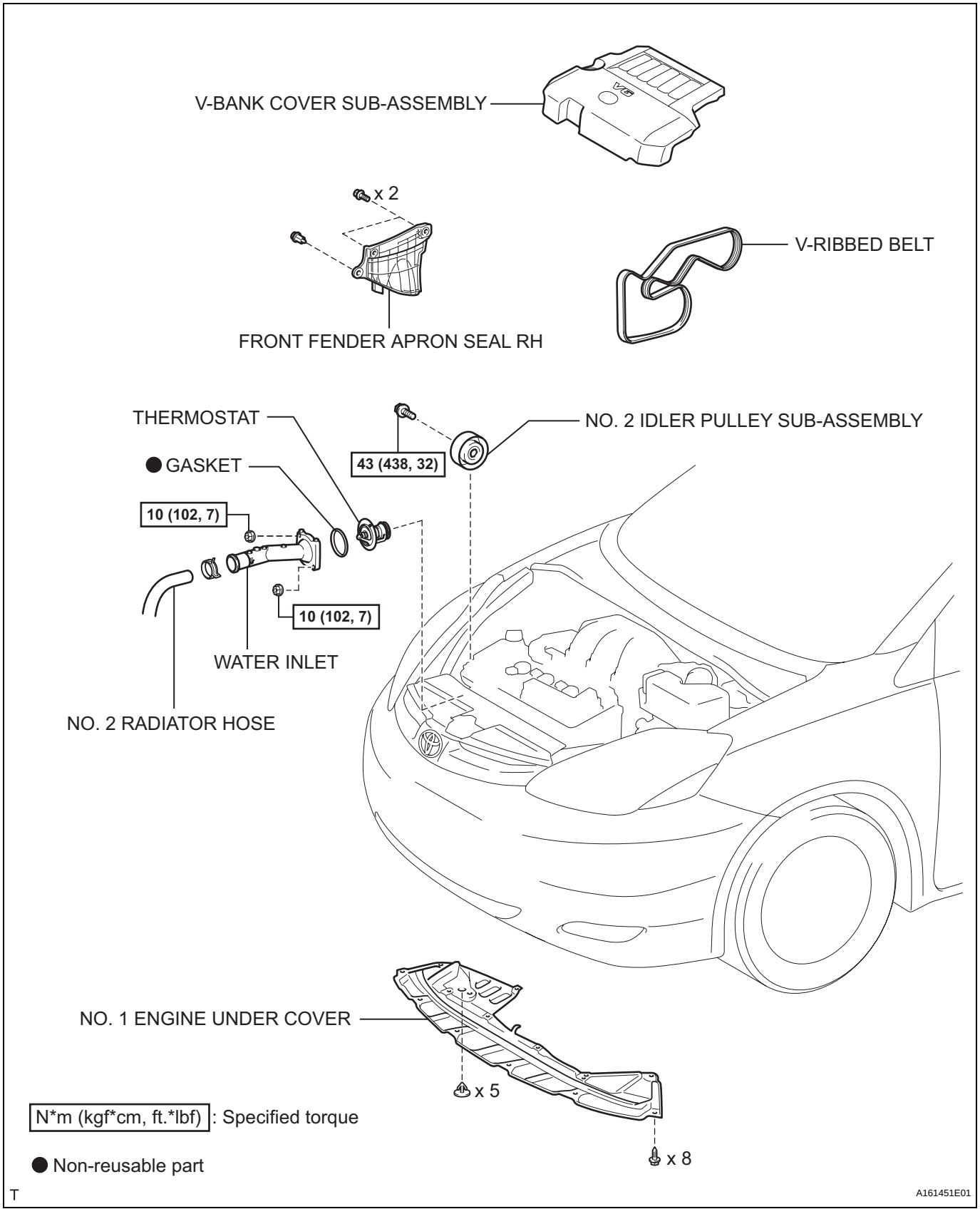

CO

REMOVAL

1. **REMOVE V-BANK COVER SUB-ASSEMBLY (See page EM-28)**
2. **REMOVE NO. 1 ENGINE UNDER COVER (See page EM-26)**
3. **DRAIN ENGINE COOLANT (See page CO-6)**
4. **REMOVE FRONT WHEEL RH**
5. **REMOVE FRONT FENDER APRON SEAL RH**
6. **REMOVE V-RIBBED BELT (See page EM-6)**
7. **DISCONNECT NO. 2 RADIATOR HOSE**
   (a) Disconnect the No. 2 radiator hose from the engine.

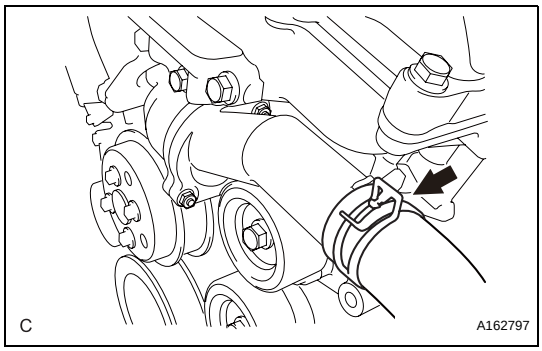

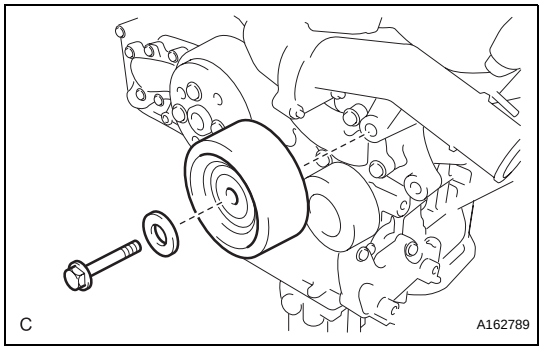

8. **REMOVE NO. 2 IDLER PULLEY SUB-ASSEMBLY**
   (a) Remove the bolt, idler pulley cover plate and idler pulley sub-assembly.

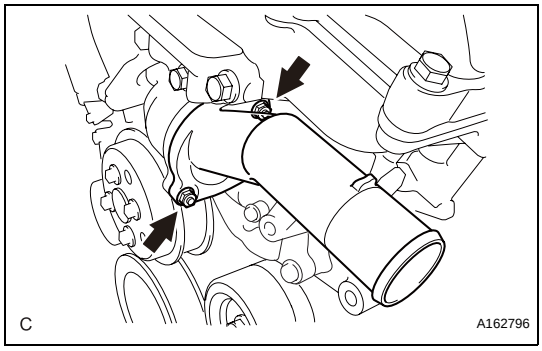

9. **REMOVE WATER INLET**
   (a) Remove the 2 nuts and water inlet.
10. **REMOVE THERMOSTAT**
    (a) Remove the gasket from the thermostat.