REMOVAL

1. **REMOVE V-BANK COVER SUB-ASSEMBLY (See page EM-28)**
2. **REMOVE NO. 1 ENGINE UNDER COVER (See page EM-26)**
3. **DRAIN ENGINE COOLANT (See page CO-6)**
4. **REMOVE NO. 2 AIR CLEANER INLET (See page EM-28)**
5. **REMOVE BATTERY (See page EM-26)**
6. **REMOVE FRONT BUMPER ASSEMBLY (See page ET-3)**
7. **REMOVE FRONT BUMPER ENERGY ABSORBER**
8. **REMOVE NO. 1 AIR CLEANER INLET (See page EM-28)**
9. **DISCONNECT RADIATOR RESERVE TANK HOSE OR PIPE**
   (a) Disconnect the radiator reserve tank hose or pipe from the radiator.

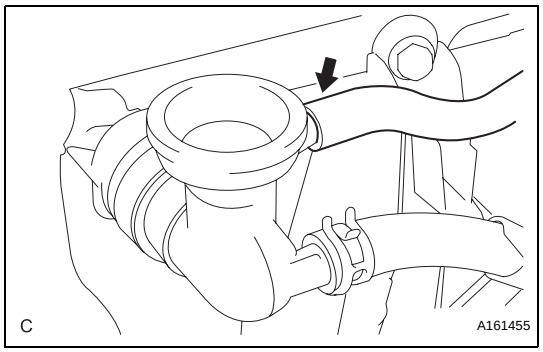

10. **DISCONNECT NO. 1 RADIATOR HOSE**
    (a) Disconnect both connections of the No. 1 radiator hose from the radiator.

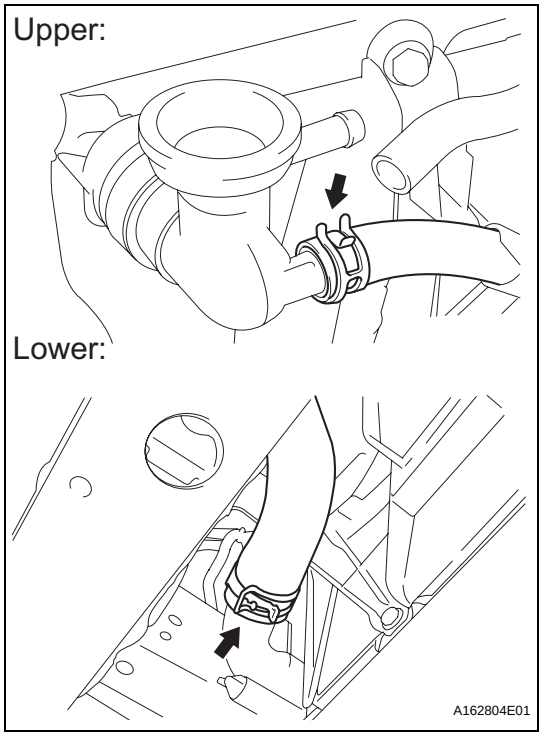

CO

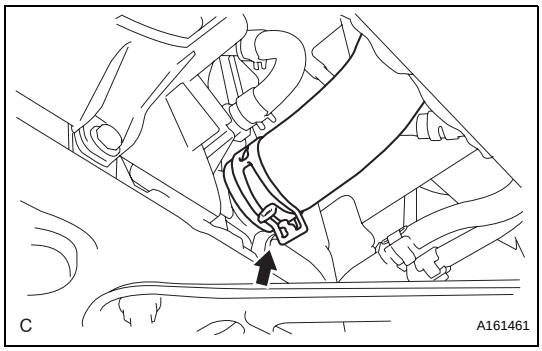

11. DISCONNECT NO. 2 RADIATOR HOSE

(a) Disconnect the No. 2 radiator hose from the radiator.

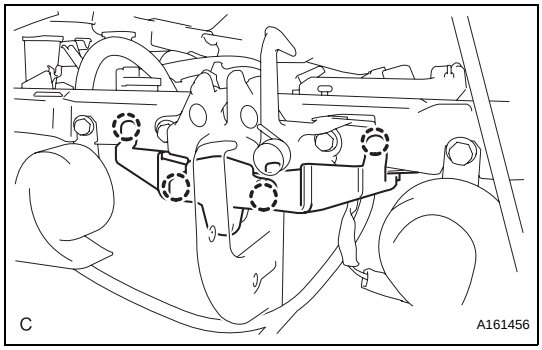

12. REMOVE HOOD LOCK RELEASE LEVER PROTECTOR

(a) Disengage the 4 claws and remove the hood lock release lever protector.

13. REMOVE HOOD LOCK ASSEMBLY

(a) With Hood Courtesy Switch:

(1) Disconnect the connector.

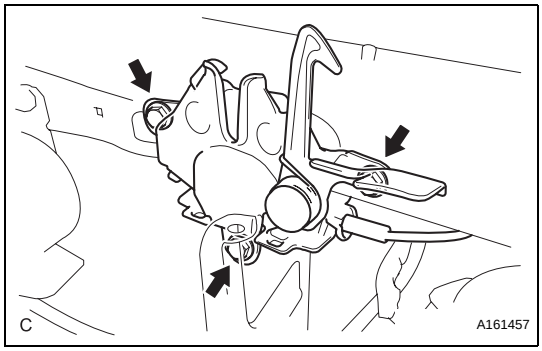

(b) Remove the 3 bolts.

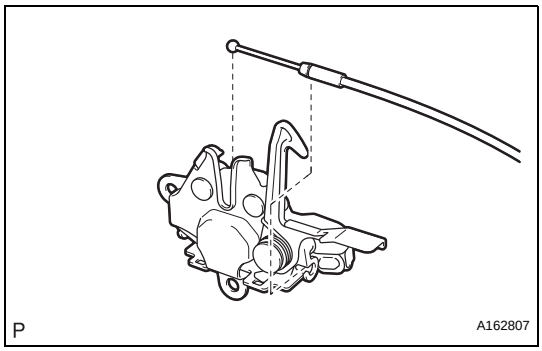

(c) Disconnect the cable and remove the hood lock assembly.

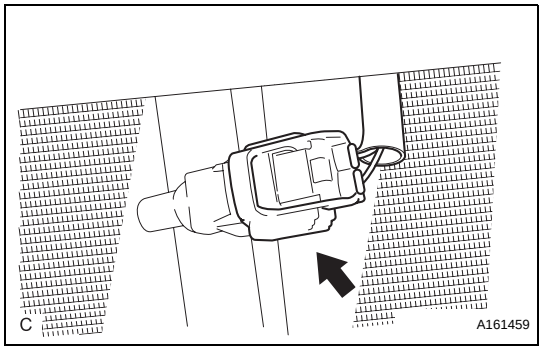

14. REMOVE HOOD LOCK SUPPORT SUB-ASSEMBLY

(a) Disconnect the ambient temperature sensor connector.

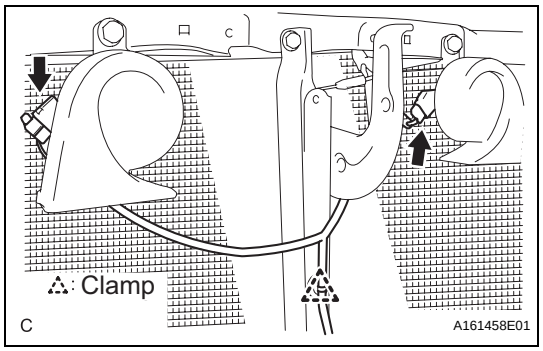

(b) Detach the clamp.
(c) Disconnect the low pitched horn and high pitched horn connectors.

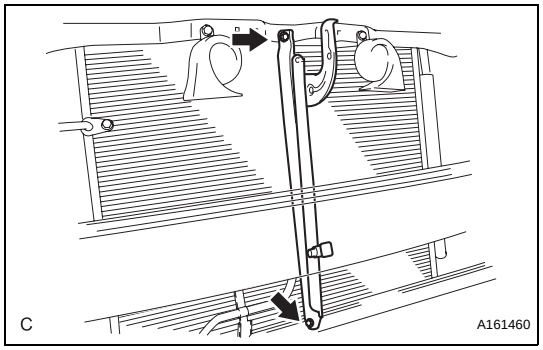

(d) Remove the 2 bolts and hood lock support sub-assembly.

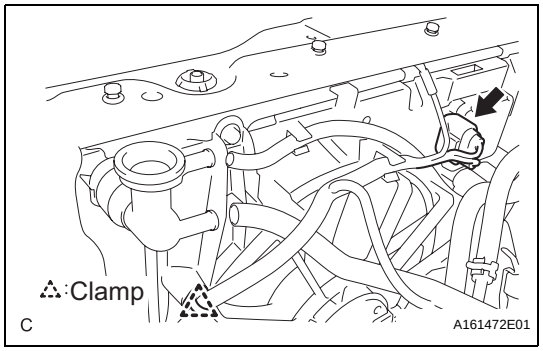

15. DISCONNECT COOLING FAN ECU CONNECTOR

(a) Disconnect the cooling fan ECU connector.
(b) Detach the clamp.

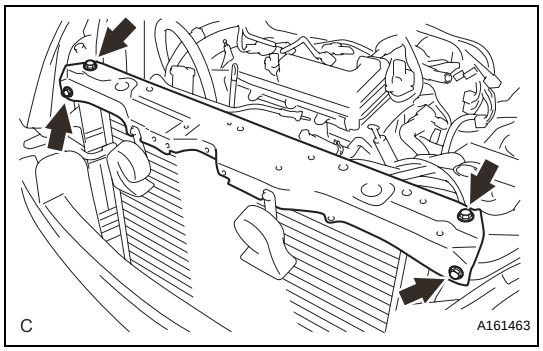

16. REMOVE RADIATOR UPPER SUPPORT SUB-ASSEMBLY

(a) Remove the 4 bolts and radiator upper support sub-assembly.

CO

17. DISCONNECT NO. 2 OIL COOLER OUTLET TUBE SUB-ASSEMBLY

(a) Disconnect the No. 1 oil cooler inlet and No. 1 oil cooler outlet hoses from the No. 2 oil cooler outlet tube sub-assembly.

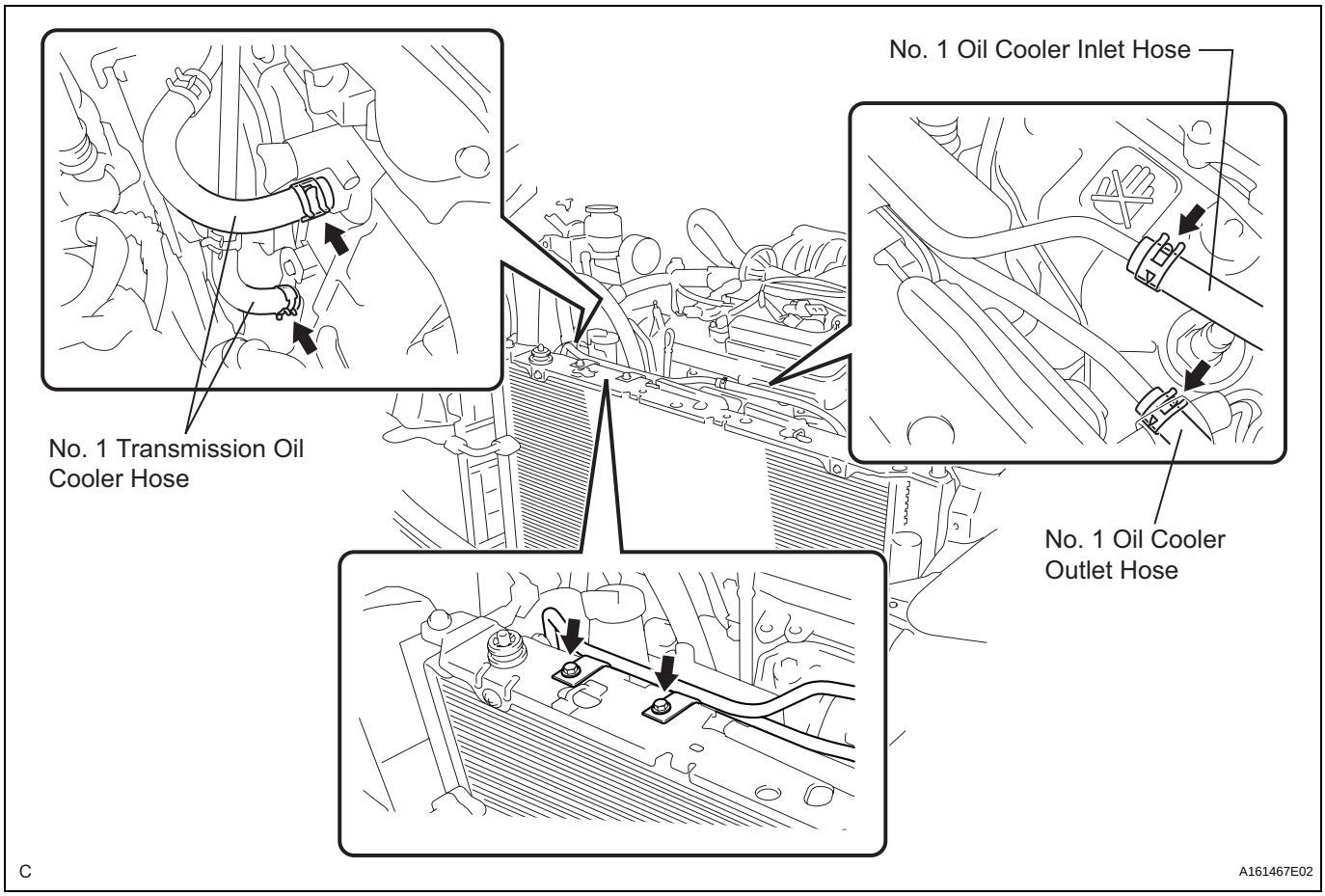

(b) Disconnect the No. 1 transmission oil cooler hoses from the radiator.

(c) Remove the 2 bolts and No. 2 oil cooler outlet tube sub-assembly.

18. REMOVE HEADLIGHT ASSEMBLY RH

(a) Use the same procedures for the RH side and LH side.
HINT:
See page LI-69

19. REMOVE RADIATOR SIDE DEFLECTOR RH

(a) Disengage the 3 claws and remove the radiator side deflector RH.

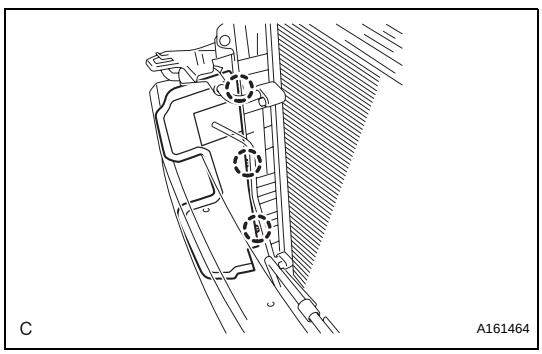

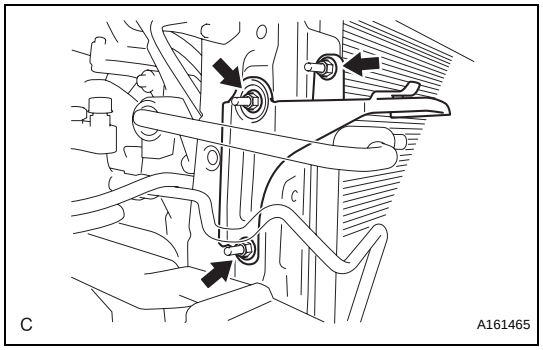

20. REMOVE HEADLIGHT BRACKET RH

(a) Remove the 3 nuts and headlight bracket RH.

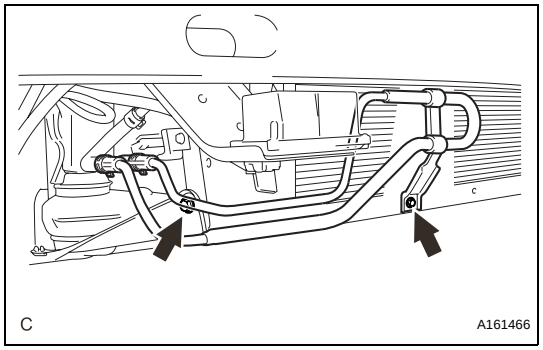

21. REMOVE PRESSURE FEED TUBE ASSEMBLY

(a) Remove the 2 bolts.

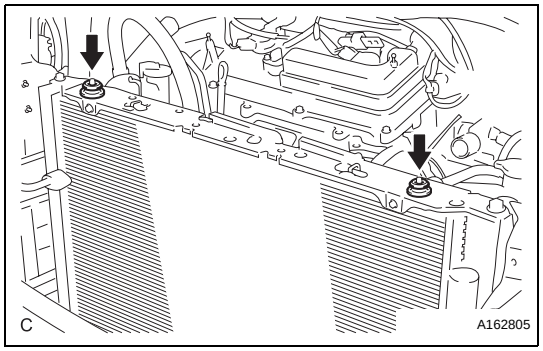

22. REMOVE RADIATOR SUPPORT CUSHION

(a) Remove the 2 radiator support cushions from the No. 1 radiator support.

23. REMOVE NO.1 RADIATOR SUPPORT

(a) Detach the clamp.

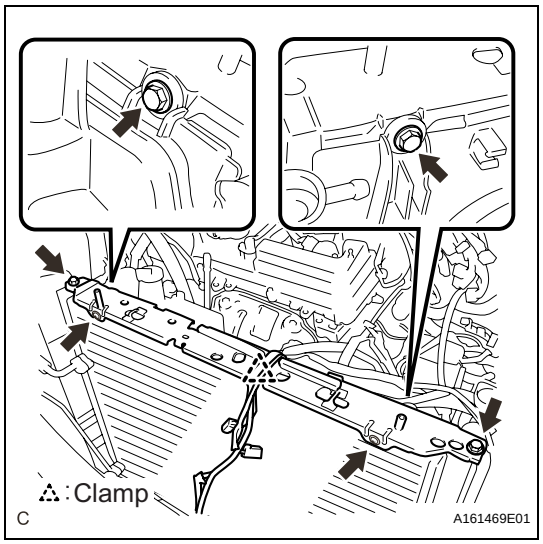

(b) Remove the 6 bolts and No. 1 radiator support.

CO

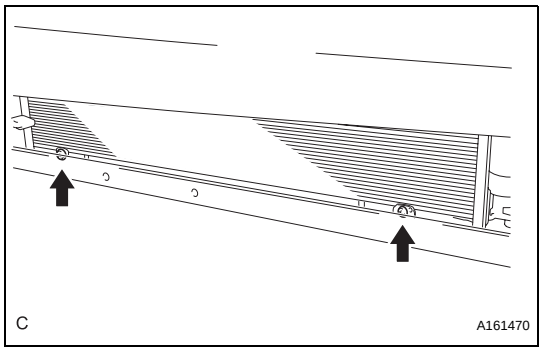

24. REMOVE RADIATOR ASSEMBLY WITH FAN SHROUD AND FAN MOTOR

(a) Remove the 2 bolts and separate the condenser assembly from the radiator assembly with fan shroud and fan motor.

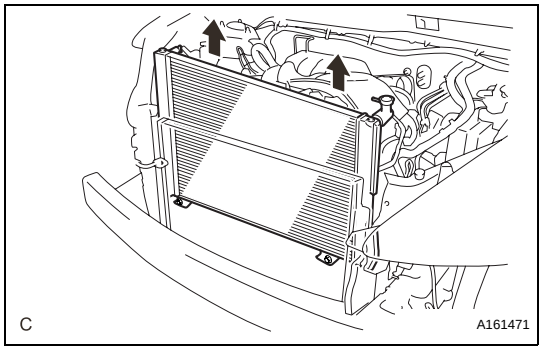

(b) Remove the radiator assembly with fan shroud and fan motor from the body.

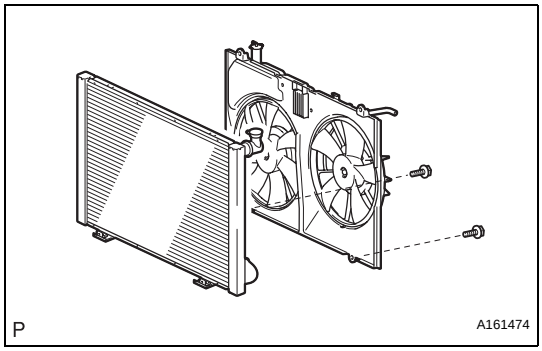

25. REMOVE FAN SHROUD WITH FAN MOTOR

(a) Remove the 2 bolts and fan shroud with fan motor from the radiator.

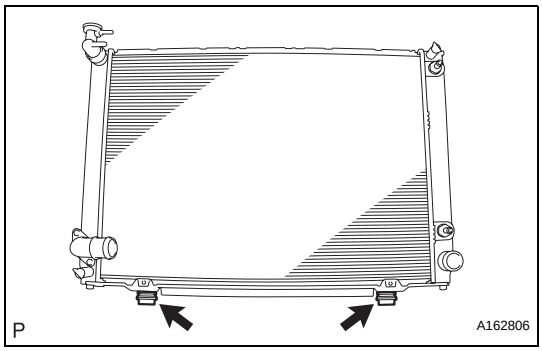

26. REMOVE RADIATOR SUPPORT LOWER

(a) Remove the 2 radiator support lowers from the radiator assembly.

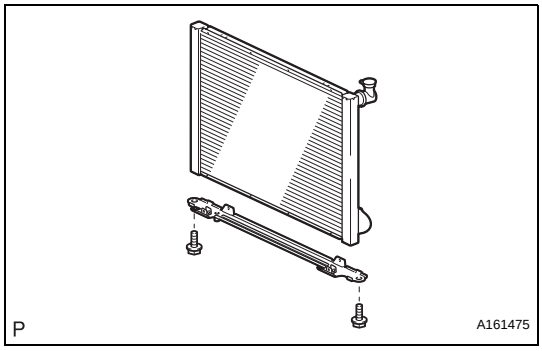

27. REMOVE NO. 2 RADIATOR SUPPORT

(a) Remove the 2 bolts and No. 2 radiator support from the radiator.

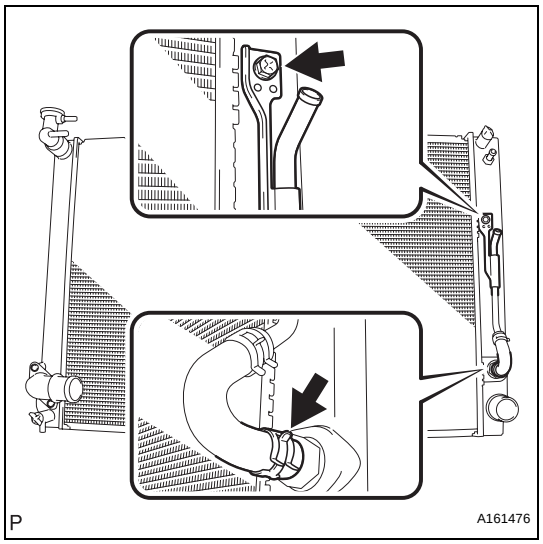

28. DISCONNECT INLET SUB-ASSEMBLY

(a) Disconnect the inlet hose from the radiator.

(b) Remove the bolt and inlet sub-assembly from the radiator.

DISASSEMBLY

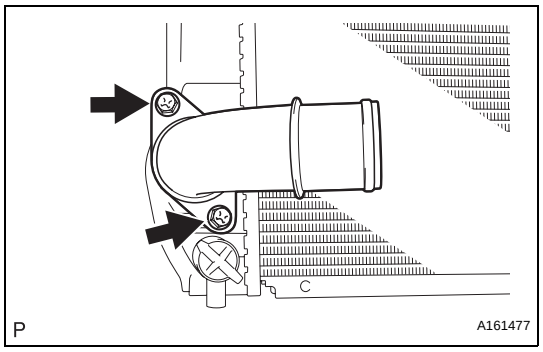

1. REMOVE RADIATOR WATER INLET

(a) Remove the 2 bolts and radiator water inlet.

2. REMOVE DRAIN PLUG

(a) Remove the drain plug and air drain plug.

(b) Remove the 2 O-rings.

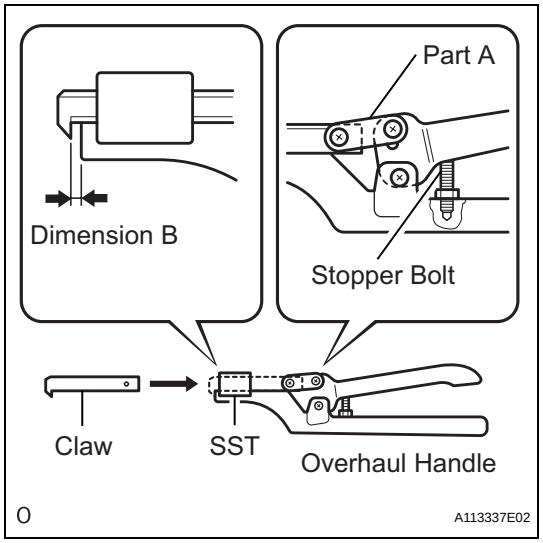

3. REMOVE LOWER RADIATOR TANK

(a) Install the claw to the overhaul handle, inserting it in the hole in Part A as shown in the illustration.
SST 09230-01010 (09231-01010, 09231-01030)

(b) While squeezing the handle, adjust the stopper bolt so that dimension B is as specified below.
Dimension B:
0.2 to 0.3 mm (0.008 to 0.012 in.)
NOTICE:
If the stopper bolt is not adjusted, the claw may be damaged.

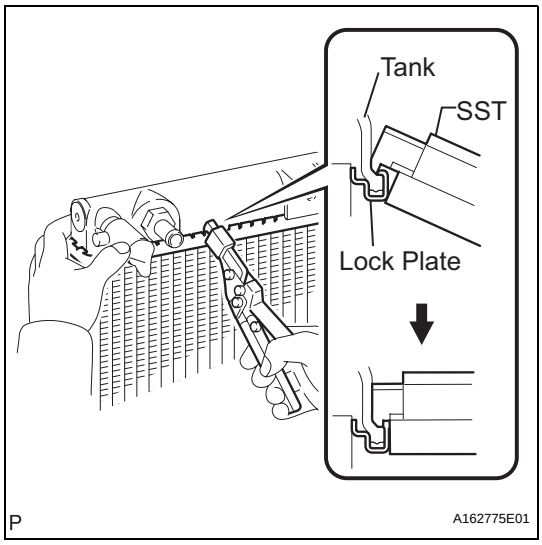

(c) Using SST, uncrimp the lock plate by squeezing the handle until stopped by the stopper bolt.
SST 09230-01010

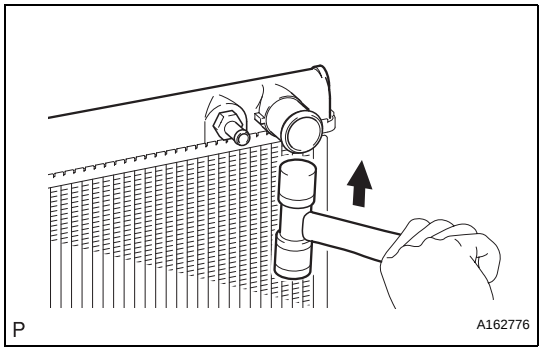

(d) Lightly tap the bracket of the radiator (or radiator hose inlet or outlet) with a soft-faced hammer and remove the tank.
(e) Remove the O-ring.

4. REMOVE UPPER RADIATOR TANK
HINT:
The removal procedure for the upper radiator tank is the same as that for the lower radiator tank.

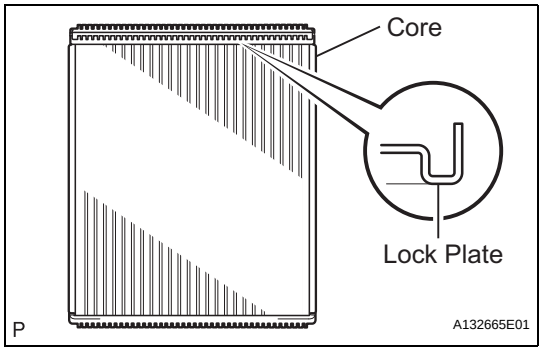

INSPECTION

1. INSPECT LOCK PLATE FOR DAMAGE
(a) Inspect the lock plate for damage.
HINT:
- Reassembly of a deformed tank will be impossible. Therefore, first correct the shape of the lock plate groove with pliers or a similar tool, if necessary.
- Water leakage will result if the bottom of the lock plate groove is damaged or dented. Repair or replace the locking plate if necessary.

NOTICE:
The radiator can only be crimped 3 times. After recrimping 2 times, the radiator core must be replaced.