LUBRICATION SYSTEM

ON-VEHICLE INSPECTION

1. CHECK ENGINE OIL LEVEL

(a) Warm up the engine, stop it and wait 5 minutes. The oil level should be between the dipstick's low level mark and full level mark.
If the engine oil level is low, check for leakage and add oil up to the full level mark.
NOTICE:
Do not add engine oil above the full level mark.

2. CHECK ENGINE OIL

(a) Check the engine oil for deterioration, water contamination, discoloring or thinning.
If the oil is bad, replace the engine oil and engine oil filter.

3. CHECK OIL PRESSURE

(a) Disconnect the oil pressure switch connector.
(b) Using a 24 mm deep socket wrench, remove the oil pressure switch.

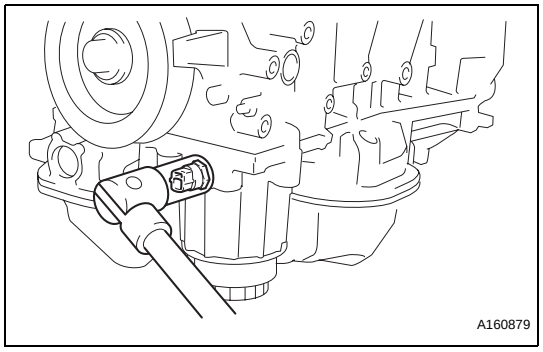

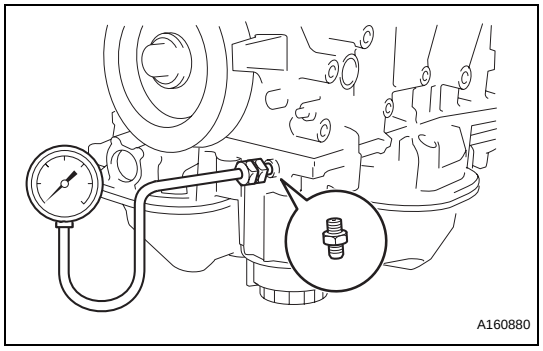

(c) Install the oil pressure gauge with adapter.
(d) Warm up the engine.
(e) Check the oil pressure.
Standard oil pressure

Engine Condition	Oil Pressure
Idle	80 kPa (0.8 kgf/cm^2, 11.6 psi) or more
3000 rpm	380 kPa (3.9 kgf/cm^2, 55.5 psi) or more

If the oil pressure is not as specified, check the oil pump (See page LU-13).

(f) Remove the oil pressure gauge.
(g) Apply adhesive to 2 or 3 threads of the oil pressure switch.
Adhesive:
Toyota Genuine Adhesive 1344, Three Bond 1344 or equivalent

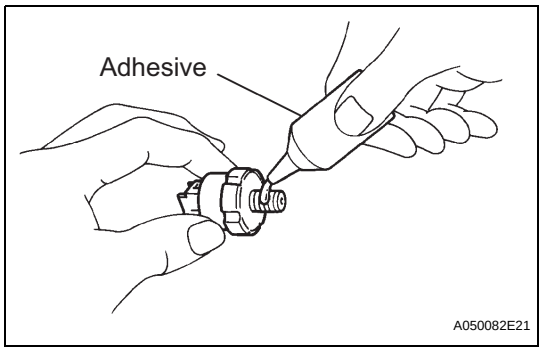

LU

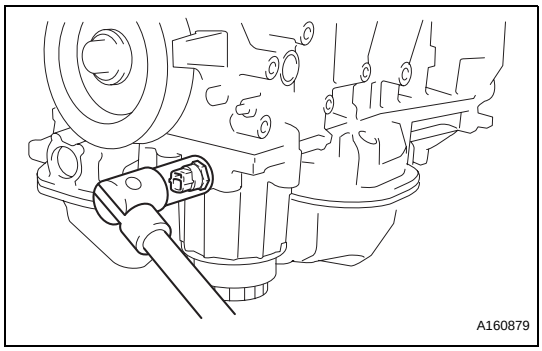

(h) Using a 24 mm deep socket wrench, install the oil pressure switch.
Torque: 15 N*m (153 kgf*cm, 11 ft.*lbf)
NOTICE:
Do not start the engine within 1 hour after installation.
(i) Connect the oil pressure switch connector.
(j) Check for engine oil leaks.