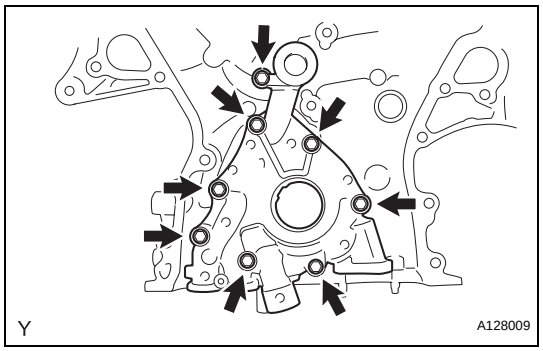

2. REMOVE OIL PUMP COVER

(a) Remove the 8 bolts, oil pump cover and oil pump rotor set.

INSPECTION

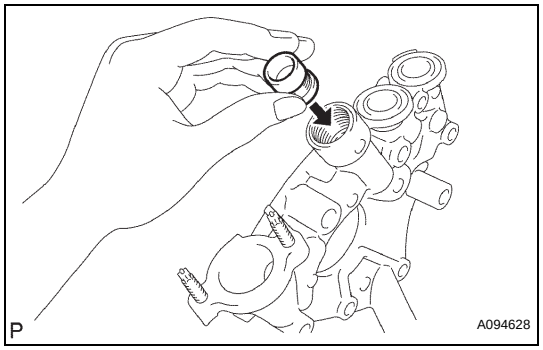

1. INSPECT OIL PUMP RELIEF VALVE

(a) Coat the relief valve with engine oil and check that it falls smoothly into the valve hole under its own weight.

If the valve does not fall smoothly, replace the relief valve. If necessary, replace the oil pump assembly.

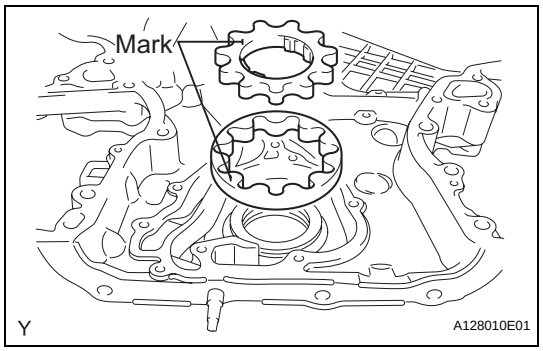

2. INSPECT OIL PUMP ROTOR SET

(a) Install the rotors to the timing chain cover with the rotors' marks facing outward. Check that the rotors rotate smoothly.

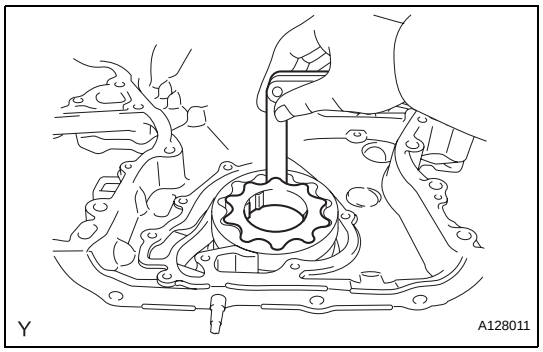

(b) Check the tip clearance.

(1) Using a feeler gauge, measure the clearance between the drive and driven rotors, as shown in the illustration.

Tip clearance

Standard	Maximum
0.060 to 0.160 mm (0.0024 to 0.0063 in.)	0.160 mm (0.0063 in.)

If the clearance is greater than the maximum, replace the drive and driven rotors.

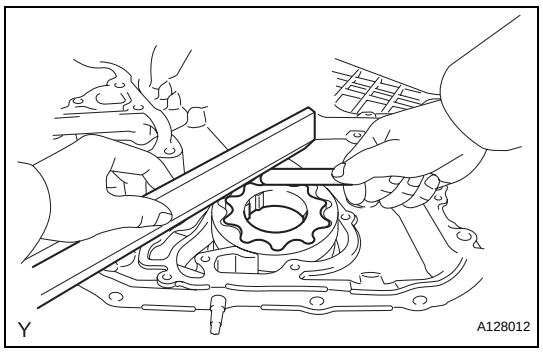

(c) Check the side clearance.

(1) Using a feeler gauge and precision straightedge, measure the clearance between the rotors and precision straightedge, as shown in the illustration.

Side clearance

Standard	Maximum
0.030 to 0.090 mm (0.0012 to 0.0035 in.)	0.090 mm (0.0035 in.)

If the side clearance is greater than the maximum, replace the timing chain cover.

LU

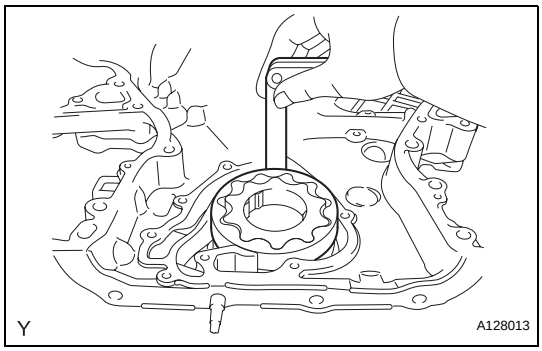

(d) Check the body clearance.
(1) Using a feeler gauge, measure the clearance between the timing chain cover and driven rotor, as shown in the illustration.
Body clearance

Standard	Maximum
0.250 to 0.325 mm (0.0098 to 0.0128 in.)	0.325 mm (0.0128 in.)

If the body clearance is greater than the maximum, replace the timing chain cover.

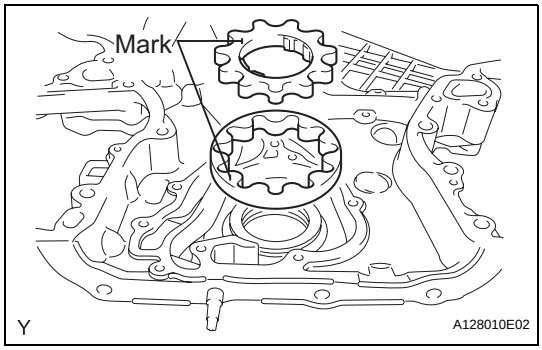

REASSEMBLY

1. INSTALL OIL PUMP COVER

(a) Coat the drive and driven rotors with engine oil and place them into the timing chain cover with the marks facing outward (oil pump cover side). Check that the rotors rotate smoothly.

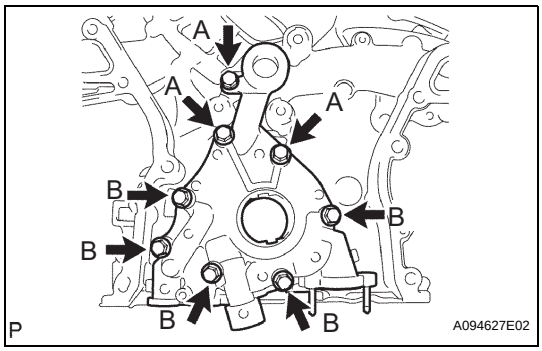

(b) Install the oil pump cover with the 8 bolts.
Torque: 9.1 N*m (93 kgf*cm, 81 in.*lbf)
Bolt length

Item	Length
Bolt A	22 mm (0.87 in.)
Bolt B	40 mm (1.58 in.)

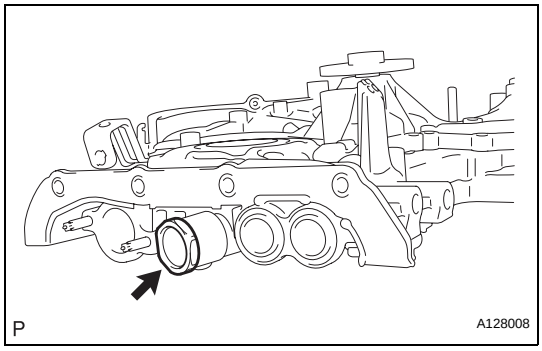

2. INSTALL OIL PUMP RELIEF VALVE

(a) Coat the oil pump relief valve with engine oil.
(b) Insert the relief valve and relief valve spring into the oil pump cover hole.
(c) Using a 27 mm socket wrench, install the plug.
Torque: 49 N*m (500 kgf*cm, 37 ft.*lbf)

INSTALLATION

1. INSTALL TIMING CHAIN CASE OIL SEAL

(a) Using SST, tap in a new oil seal until its surface is flush with the timing chain case edge.
SST 09223-22010, 09506-35010
NOTICE:
- **Keep the lip free from foreign matter.**
- **Do not tap on the oil seal at an angle.**
- **Make sure that the oil seal edge does not stick out of the timing chain case.**

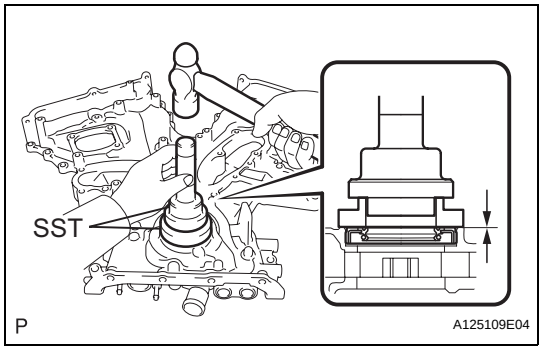

LU

2. INSTALL TIMING CHAIN COVER SUB-ASSEMBLY

(a) Apply seal packing in a continuous line to the engine unit as shown in the following illustration.

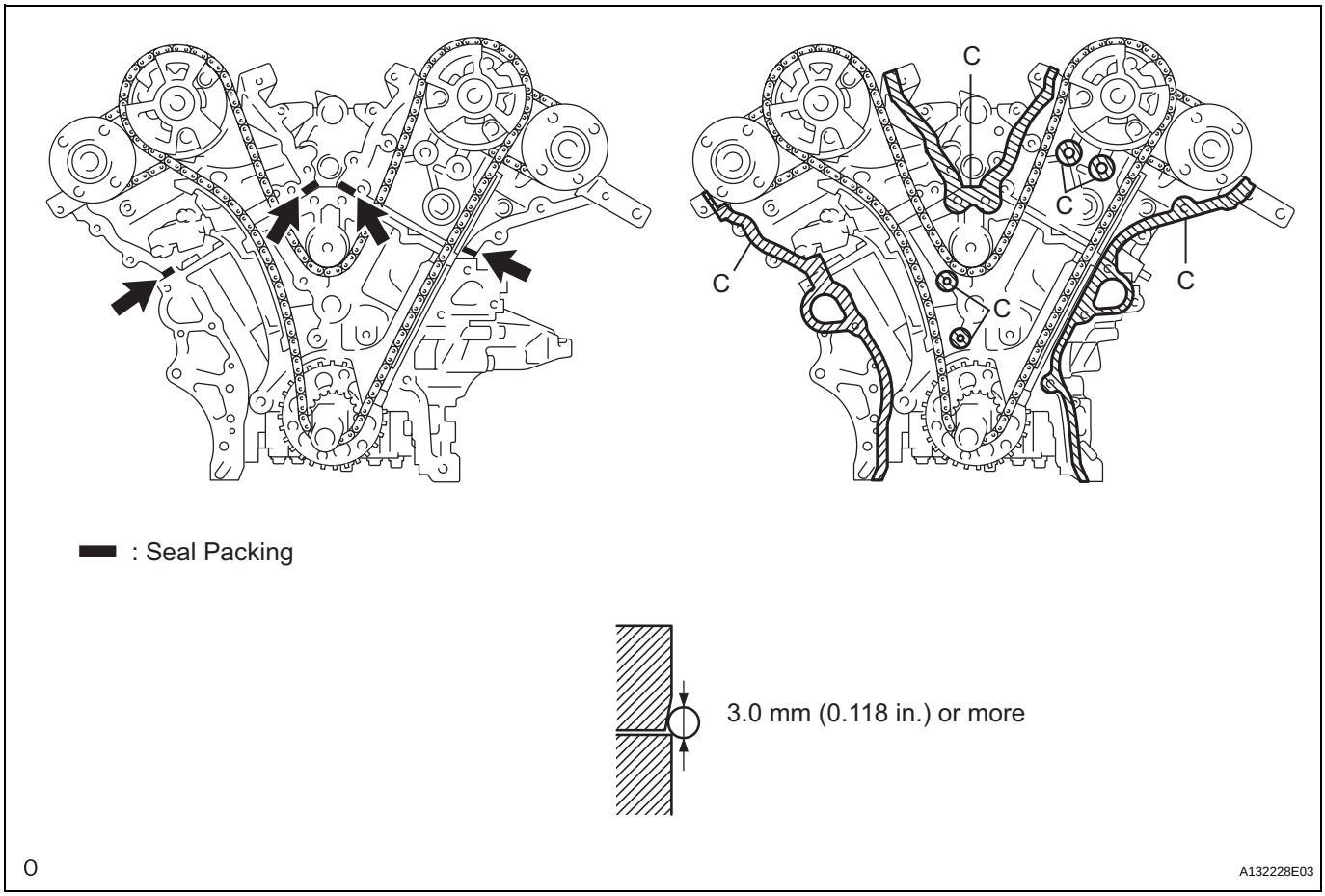

Seal packing:
Toyota Genuine Seal Packing Black, Three Bond 1207B or equivalent
Seal diameter:
3.0 mm (0.118 in.)
NOTICE:

- **Be sure to clean and degrease the contact surfaces, especially the surfaces indicated by C in the illustration.**
- **When the contact surfaces are wet, wipe them with an oil-free cloth before applying seal packing.**
- **Install the chain cover within 3 minutes.**
- **Do not start the engine for at least 2 hours after installing.**

LU

(b) Apply seal packing in a continuous line to the timing chain cover as shown in the following illustration.

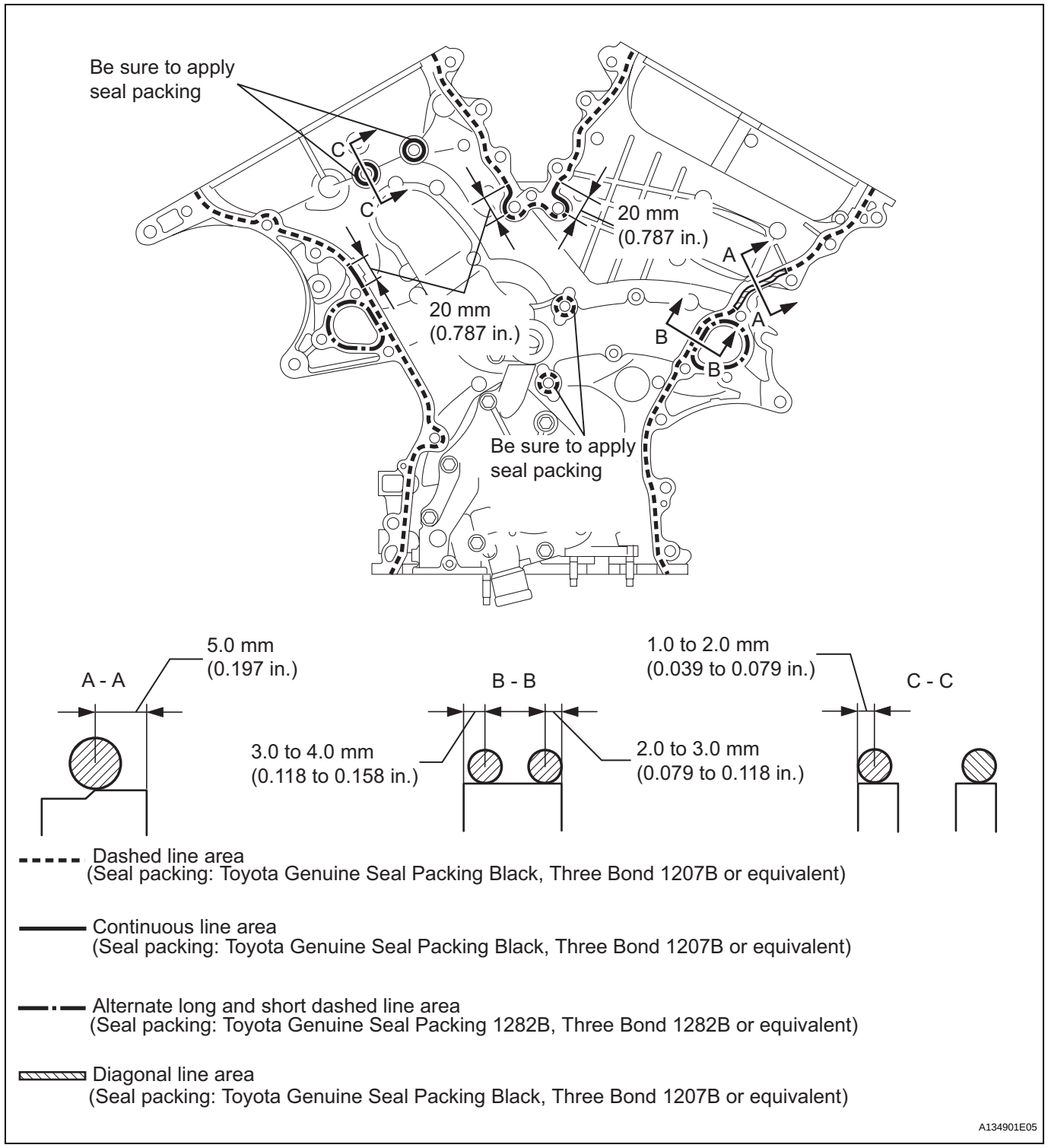

Seal packing:
Toyota Genuine Seal Packing Black, Three Bond 1207B or equivalent
Toyota Genuine Seal Packing 1282B, Three Bond 1282B or equivalent

NOTICE:

- **When the contact surfaces are wet, wipe them with an oil-free cloth before applying seal packing.**
- **Install the chain cover within 3 minutes and tighten the bolts within 15 minutes after applying seal packing.**
- **Do not start the engine for at least 2 hours after installing it.**

Apply seal packing as follows

Area	Seal Packing Diameter	Application Position from Inside Seal Line
Continuous Line Area	4.5 mm (0.177 in.) or more	3.0 to 4.0 mm (0.118 to 0.158 in.)
Alternate Long and Short Dashed Line Area	3.5 mm (0.138 in.) or more	2.0 to 3.0 mm (0.079 to 0.118 in.)
Dashed Line Area	3.5 mm (0.138 in.) or more	3.0 to 4.0 mm (0.118 to 0.158 in.)
Diagonal Line Area	6.0 mm (0.236 in.) or more	5.0 mm (0.197 in.)

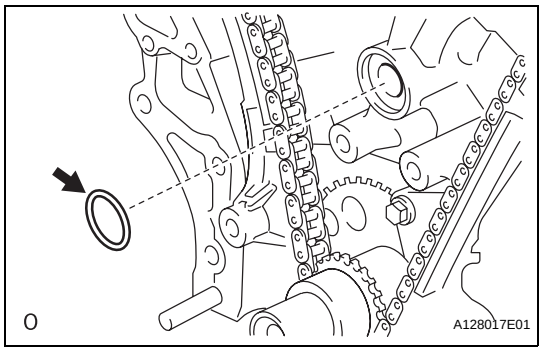

(c) Install a new gasket.

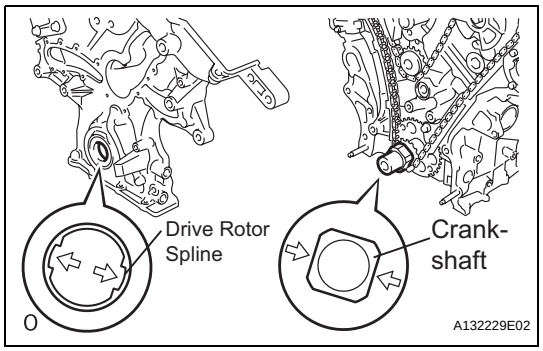

(d) Align the oil pump's drive rotor spline and the crankshaft as shown in the illustration. Install the spline and chain cover to the crankshaft.

(e) Temporarily tighten the timing chain cover with the 23 bolts and 2 nuts.

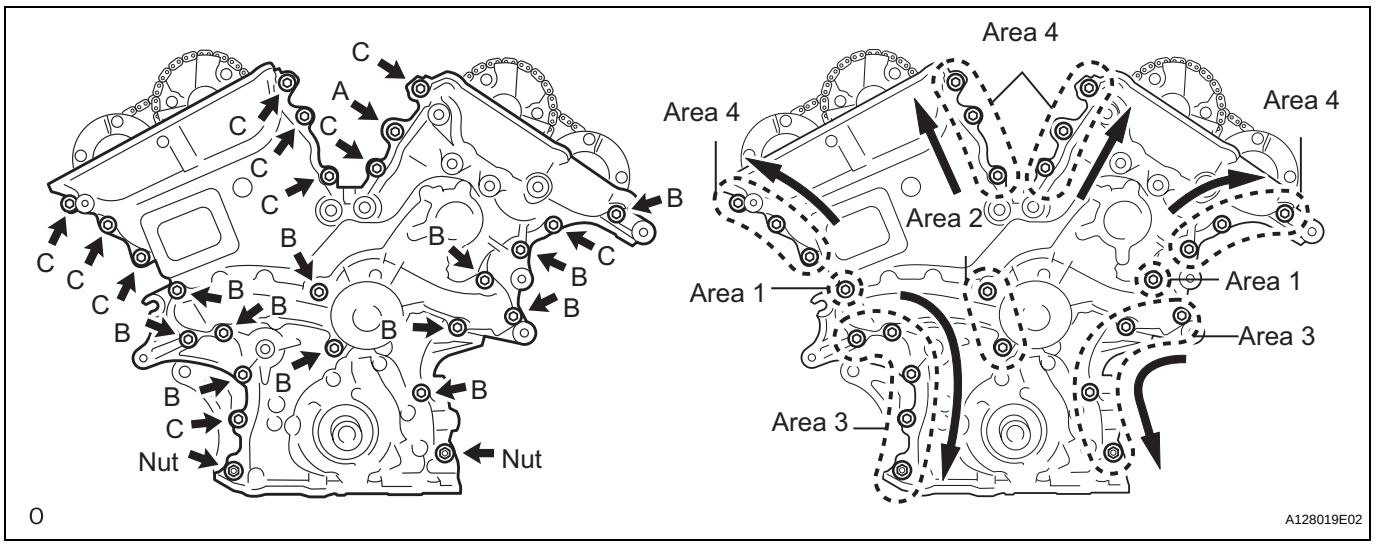

Bolt length

Item	Length
Bolt A	40 mm (1.57 in.)
Bolt B	55 mm (2.17 in.)
Bolt C	25 mm (0.98 in.)

NOTICE:
Make sure that there is no oil on the bolt threads.

(f) Fully tighten the bolts in: Area 1 and Area 2.
Torque: 21 N*m (214 kgf*cm, 15 ft.*lbf)

(g) Fully tighten the bolts and nuts in: Area 3.
Torque: 21 N*m (214 kgf*cm, 15 ft.*lbf)
HINT:
Tighten the bolts and nuts from top to bottom as shown in the illustration.

(h) Fully tighten the bolts in: Area 4.
Torque: Bolt A
43 N*m (438 kgf*cm, 32 ft.*lbf)
Except bolt A
21 N*m (214 kgf*cm, 15 ft.*lbf)
HINT:
Tighten the bolts from bottom to top as shown in the illustration.

3. **INSTALL WATER INLET HOUSING (See page CO-13)**

4. **INSTALL OIL PAN SUB-ASSEMBLY (See page EM-160)**

5. **INSTALL OIL STRAINER SUB-ASSEMBLY (See page EM-161)**

6. **INSTALL NO. 2 OIL PAN SUB-ASSEMBLY (See page EM-162)**

7. **INSTALL CYLINDER HEAD COVER SUB-ASSEMBLY (for Bank 1) (See page EM-163)**

8. **INSTALL CYLINDER HEAD COVER SUB-ASSEMBLY (for Bank 2) (See page EM-163)**

9. **INSTALL CRANKSHAFT PULLEY (See page EM-166)**

10. **INSTALL OIL COOLER PIPE**
(a) Install a new gasket to the oil pan sub-assembly.
(b) Install the oil cooler pipe with the bolt and 2 nuts.
Torque: 21 N*m (214 kgf*cm, 16 ft.*lbf)

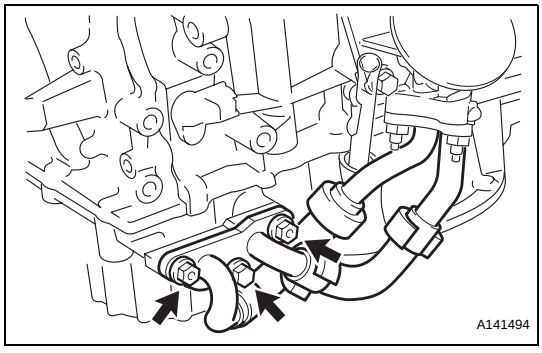

11. **INSTALL NO. 1 OIL PIPE (See page EM-167)**

12. **INSTALL OIL PIPE (See page EM-168)**

13. **INSTALL OIL LEVEL GAUGE GUIDE SUB-ASSEMBLY (See page EM-48)**

14. **INSTALL ENGINE ASSEMBLY WITH TRANSAXLE**
HINT:
See page EM-44

LU