ON-VEHICLE INSPECTION

NOTICE:
In this section, the terms "cold" and "hot" refer to the temperature of the coils. "Cold" means approximately -10°C (14°F) to 50°C (122°F). "Hot" means approximately 50°C (122°F) to 100°C (212°F).

1. INSPECT IGNITION COIL ASSEMBLY

(a) Check for DTCs.
NOTICE:
If any DTC is present, perform troubleshooting in accordance with the procedures for that DTC.

(b) Remove the ignition coil assembly and spark plug. (See page IG-8).

(c) Check that sparks occur.

(1) Disconnect the 6 fuel injector connectors.

(2) Install the spark plugs to each ignition coil, and connect the ignition coil connectors.

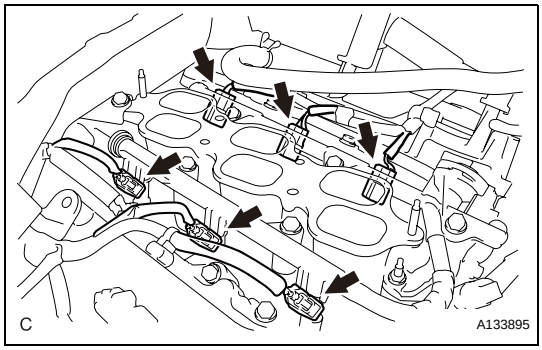

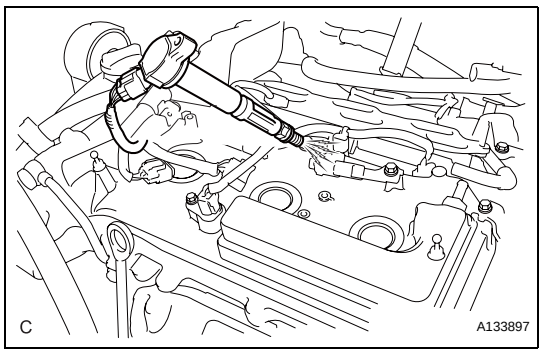

(3) Ground the spark plugs.

(4) Check if a spark occurs at each spark plug while the engine is being cranked.
NOTICE:
- **Be sure to ground the spark plugs when checking.**
- **Replace the ignition coil if it receives an impact.**
- **Do not crank the engine for more than 2 seconds.**

(d) Perform the spark test according to the flowchart below.

(1) Check that the ignition coil connector is securely connected.
Result

Result	Proceed to
NG	Connect securely
OK	Go to next step

(2) Perform a spark test on each ignition coil.
1. Replace the ignition coil with a normal one.
2. Perform the spark test again.
Result

Result	Proceed to
NG	Go to next step
OK	Replace ignition coil

(3) Check the spark plug (See page EM-1).
Result

Result	Proceed to
NG	Replace spark plug
OK	Go to next step

(4) Check the power supply to the ignition coil.
1. Turn the ignition switch to the ON position.
2. Check that there is battery voltage at the ignition coil positive (+) terminal.
Result

Result	Proceed to
NG	Check wiring between ignition switch and ignition coil
OK	Go to next step

(5) Measure the resistance of the crankshaft position sensor (See page ES-514).
Result

Result	Proceed to
NG	Replace crankshaft position sensor
OK	Go to next step

(6) Check the IGT signal from the ECM (See page ES-233)
Result

Result	Proceed to
NG	Check ECM
OK	Repair wiring between ignition coil and ECM

IG

(e) Using a 16 mm (0.63 in.) plug wrench, install the spark plugs.
Torque: 18 N*m (184 kgf*cm, 13 ft.*lbf)
(f) Connect the 6 fuel injector connectors.
(g) Install the ignition coil assembly (See page IG-10).

2. INSPECT SPARK PLUG
NOTICE:
- **Never use a wire brush for cleaning.**
- **Never attempt to adjust the electrode gap on a used spark plug.**

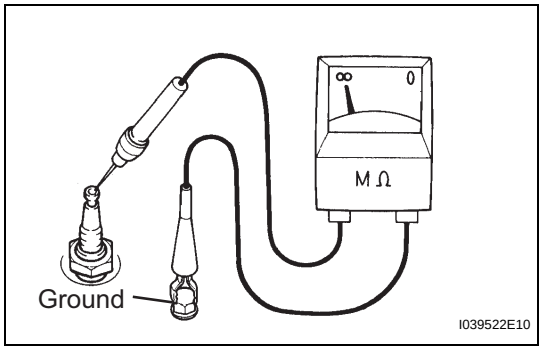

(a) Check the electrode.
(1) Using a megohmmeter, measure the insulation resistance.
Standard insulation resistance:
10 MΩ or higher
HINT:
- If the result is 10 MΩ or less, clean the plug and measure the resistance again.
- If a megohmmeter is not available, perform the following simple inspection instead.

(b) Alternative inspection method:
(1) Quickly accelerate the engine to 4000 rpm 5 times.

(2) Remove the spark plugs.
(3) Visually check the spark plug.
If the electrode is dry, the spark plug is functioning properly. If the electrode is damp, proceed to the next step.

(c) Check the spark plug for any damage to its threads and insulator. If there is damage, replace the spark plug.

Recommended spark plug

Manufacturer	Spark Plug Type
DENSO	FK20HR11

NOTICE:
Use only the listed spark plug or equivalent to ensure engine performance and smooth driveability.

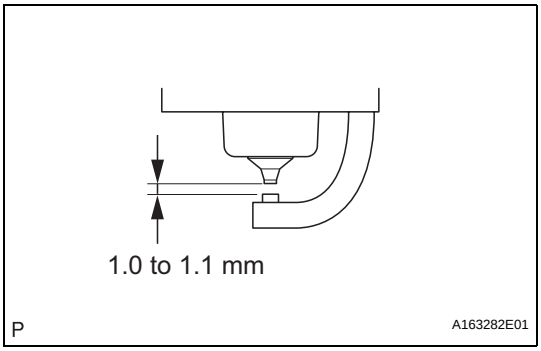

(d) Check the spark plug electrode gap.
Maximum electrode gap for used spark plug:
1.4 mm (0.055 in.)
If the gap is greater than the maximum, replace the spark plug.
Electrode gap for new spark plug:
1.0 to 1.1 mm (0.039 to 0.043 in.)

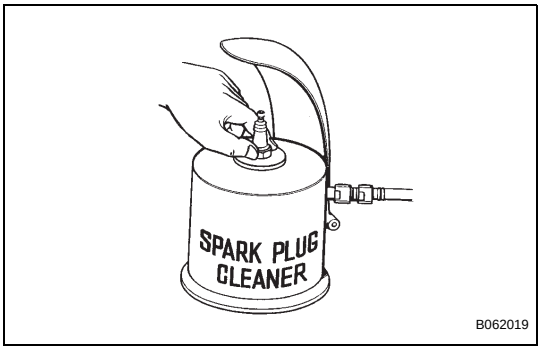

(e) Clean the spark plugs.
If the electrode has traces of wet carbon, clean the electrode with a spark plug cleaner and then dry it.
Standard air pressure:
588 kPa (6 kgf*cm^2, 85 psi)
Standard duration:
20 seconds or less
HINT:
Only use the spark plug cleaner when the electrode is free of oil. If the electrode has traces of oil, use gasoline to clean off the oil before using the spark plug cleaner.

(f) Install the ignition coil assembly and spark plug. (See page IG-10).