REMOVAL

1. **DISCONNECT CABLE FROM NEGATIVE BATTERY TERMINAL**
2. **DRAIN ENGINE COOLANT**
3. **REMOVE FRONT WIPER ARM HEAD CAP (See page WW-4)**
4. **REMOVE FRONT WIPER ARM RH (See page WW-4)**
5. **REMOVE FRONT WIPER ARM LH (See page WW-4)**
6. **REMOVE COWL TOP VENTILATOR LOUVER SUB-ASSEMBLY (See page WW-4)**
7. **REMOVE WINDSHIELD WIPER MOTOR AND LINK ASSEMBLY (See page WW-4)**
8. **REMOVE NO. 1 COWL TOP TO COWL BRACE INNER (See page FU-13)**
9. **REMOVE COWL TOP PANEL SUB-ASSEMBLY OUTER FRONT (See page FU-13)**
10. **REMOVE NO. 1 ENGINE UNDER COVER**
11. **REMOVE V-BANK COVER SUB-ASSEMBLY (See page EM-28)**
12. **REMOVE AIR CLEANER CAP SUB-ASSEMBLY (See page FU-13)**
13. **REMOVE INTAKE AIR SURGE TANK ASSEMBLY (See page FU-14)**
14. **REMOVE NO. 1 SURGE TANK STAY**
    (a) Remove the 2 bolts and nut and disconnect the 2 harness clamps.

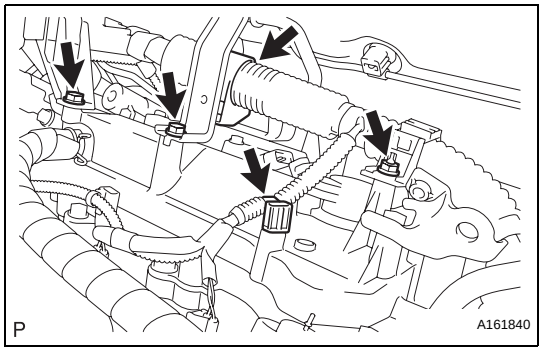

(b) Remove the bolt and No. 1 surge tank stay.

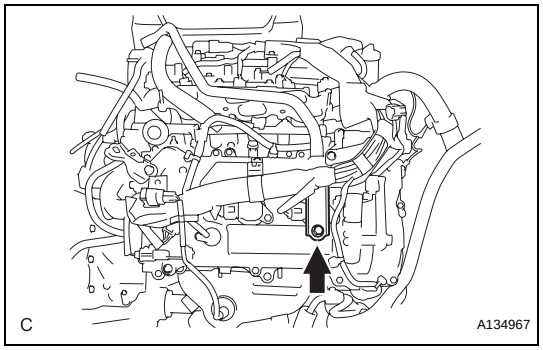

IG

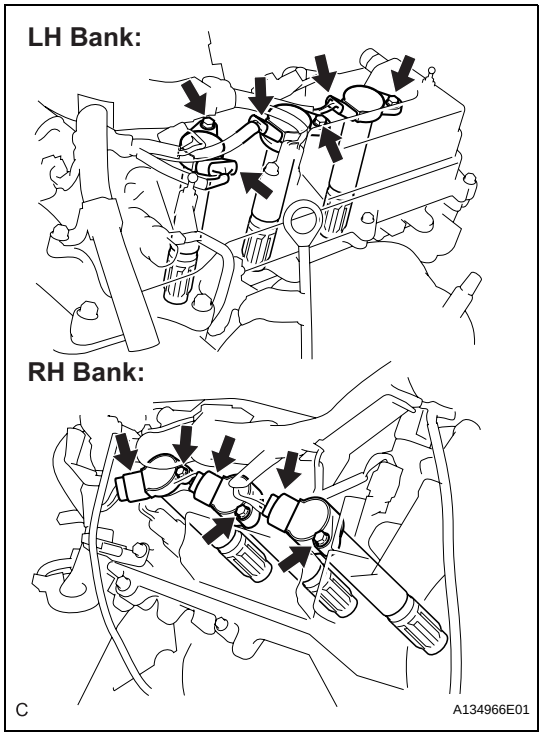

15. REMOVE IGNITION COIL ASSEMBLY

(a) Disconnect the 6 ignition coil connectors.

(b) Remove the 6 bolts and 6 ignition coils.

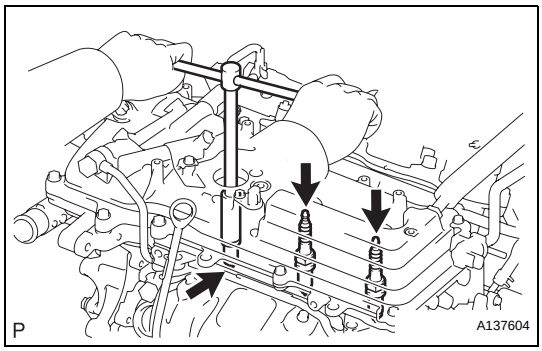

16. REMOVE SPARK PLUG

(a) Remove the 6 spark plugs.

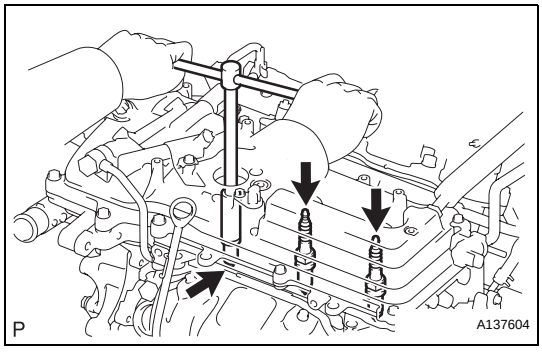

INSTALLATION

1. INSTALL SPARK PLUG

(a) Install the 6 spark plugs.

Torque: 18 N*m (183 kgf*cm, 13 ft.*lbf)

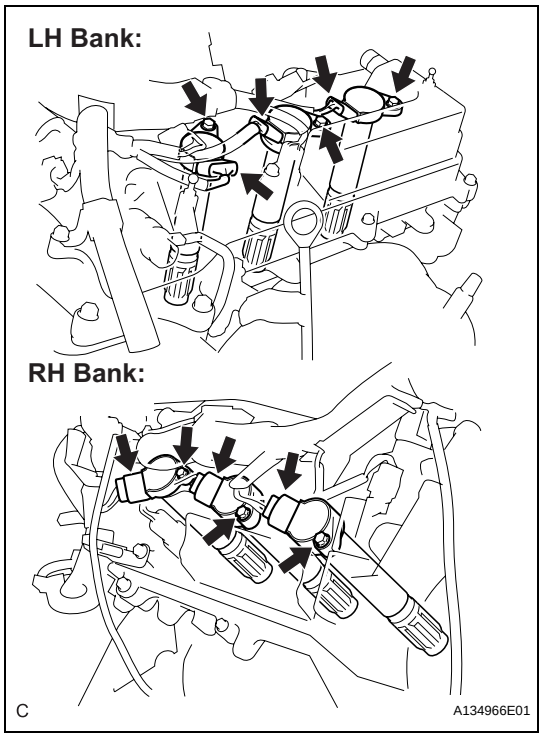

2. **INSTALL IGNITION COIL ASSEMBLY**
   (a) Install the 6 ignition coils with the 6 bolts.
   Torque: 10 N*m (102 kgf*cm, 7 ft.*lbf)
   (b) Connect the 6 ignition coil connectors.

3. **INSTALL NO. 1 SURGE TANK STAY**
   NOTICE:
   DO NOT apply oil to the bolt listed below:

Tightening Parts
No. 1 surge tank stay and cylinder head cover

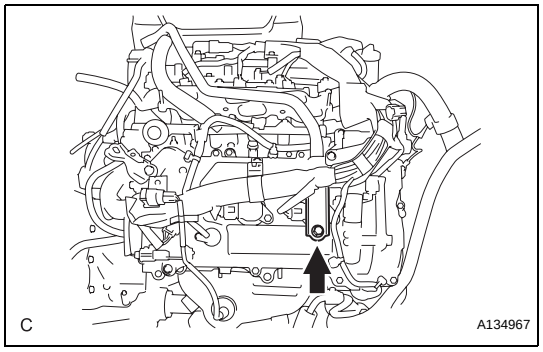

   (a) Install the No. 1 surge tank stay with the bolt.
   Torque: 21 N*m (214 kgf*cm, 15 ft.*lbf)

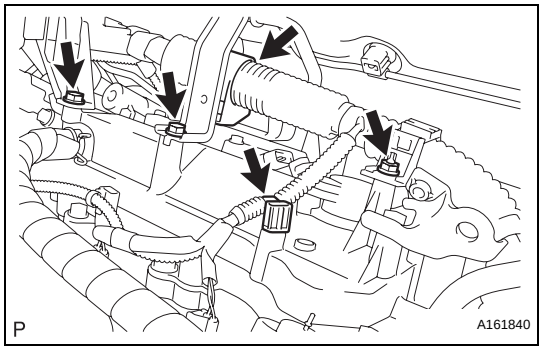

   (b) Install the 2 bolts, 2 clamps, and nut.
   Torque: 8.3 N*m (84 kgf*cm, 73 in.*lbf)

4. **INSTALL INTAKE AIR SURGE TANK ASSEMBLY (See page FU-19)**
5. **INSTALL AIR CLEANER CAP SUB-ASSEMBLY (See page FU-20)**
6. **ADD ENGINE COOLANT (See page CO-7)**
7. **CONNECT CABLE TO NEGATIVE BATTERY TERMINAL**
8. **INSPECT FOR ENGINE COOLANT LEAK (See page CO-1)**
9. **INSTALL V-BANK COVER SUB-ASSEMBLY (See page EM-63)**
10. **INSTALL COWL TOP PANEL SUB-ASSEMBLY OUTER FRONT (See page FU-21)**
11. **INSTALL NO. 1 COWL TOP TO COWL BRACE INNER (See page FU-21)**

12. **INSTALL WINDSHIELD WIPER MOTOR AND LINK ASSEMBLY (See page WW-6)**
13. **INSTALL FRONT WIPER ARM LH (See page WW-6)**
14. **INSTALL FRONT WIPER ARM RH (See page WW-7)**