IGNITION COIL AND SPARK PLUG

COMPONENTS

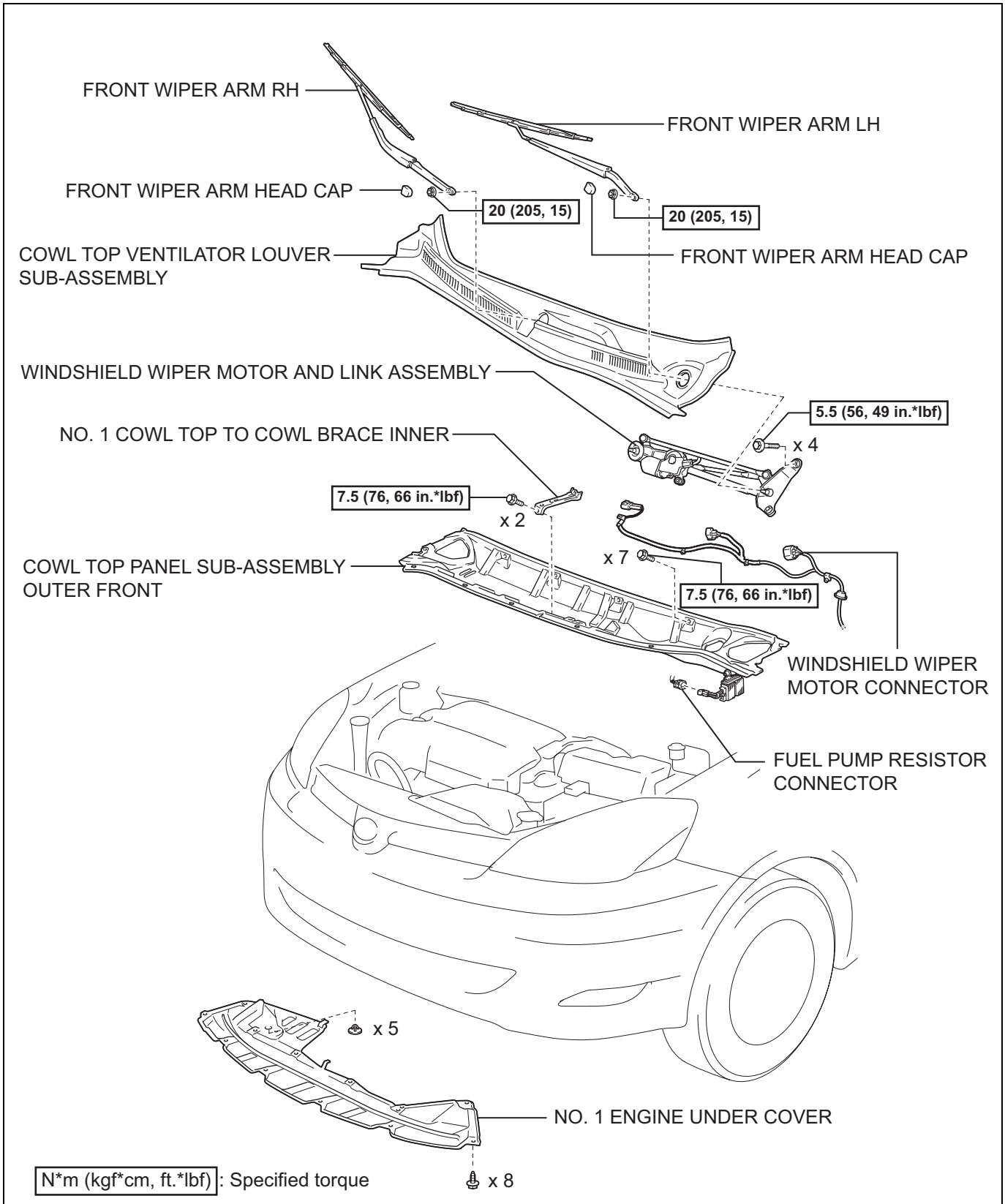

IG

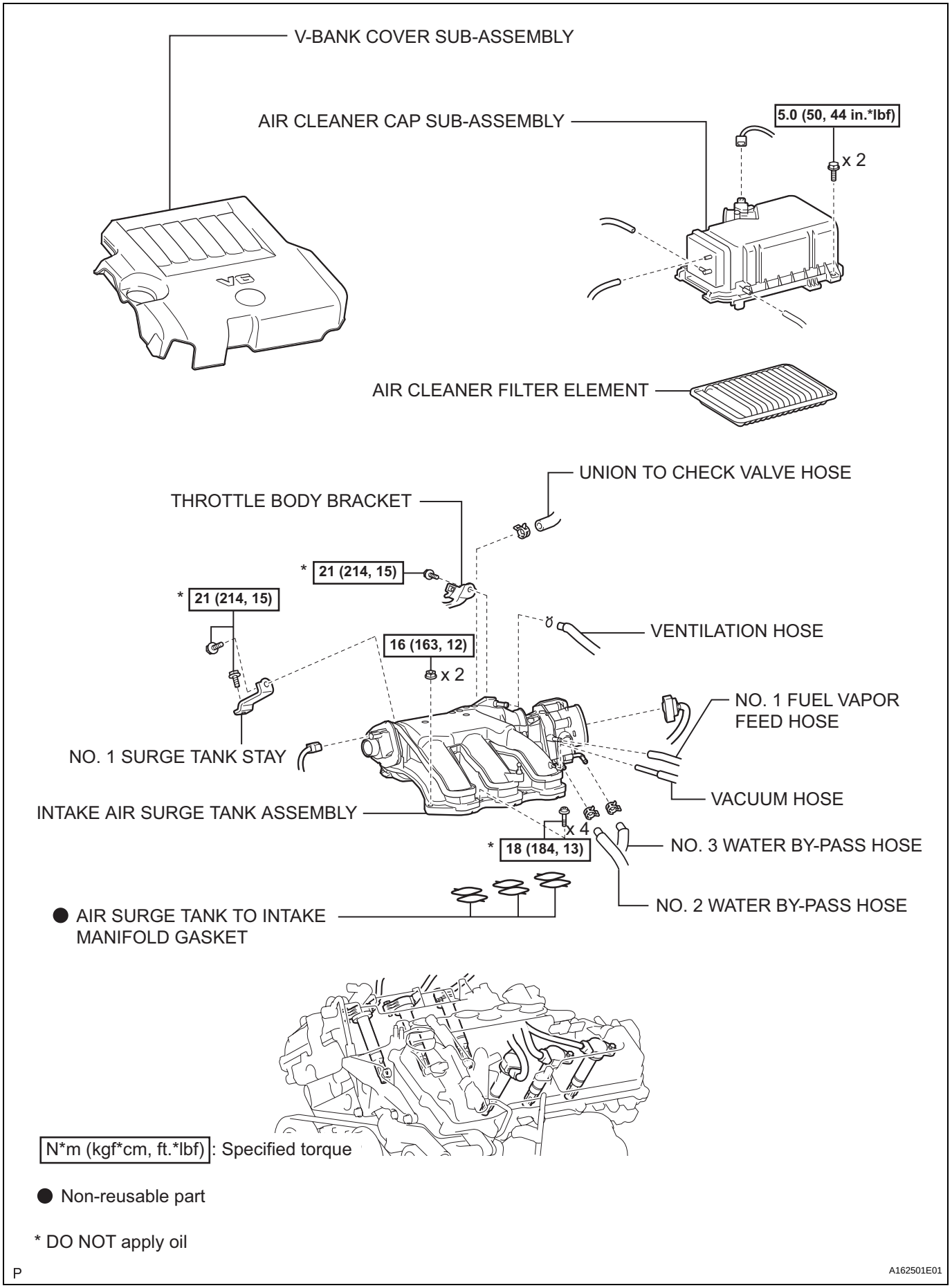
V-BANK COVER SUB-ASSEMBLY
AIR CLEANER CAP SUB-ASSEMBLY
5.0 (50, 44 in.*lbf)
x 2
AIR CLEANER FILTER ELEMENT
UNION TO CHECK VALVE HOSE
THROTTLE BODY BRACKET
* 21 (214, 15)
* 21 (214, 15)
VENTILATION HOSE
16 (163, 12)
x 2
NO. 1 FUEL VAPOR FEED HOSE
NO. 1 SURGE TANK STAY
VACUUM HOSE
INTAKE AIR SURGE TANK ASSEMBLY
x 4
* 18 (184, 13)
NO. 3 WATER BY-PASS HOSE
NO. 2 WATER BY-PASS HOSE
● AIR SURGE TANK TO INTAKE MANIFOLD GASKET
N*m (kgf*cm, ft.*lbf): Specified torque
● Non-reusable part
* DO NOT apply oil
P
A162501E01

IG

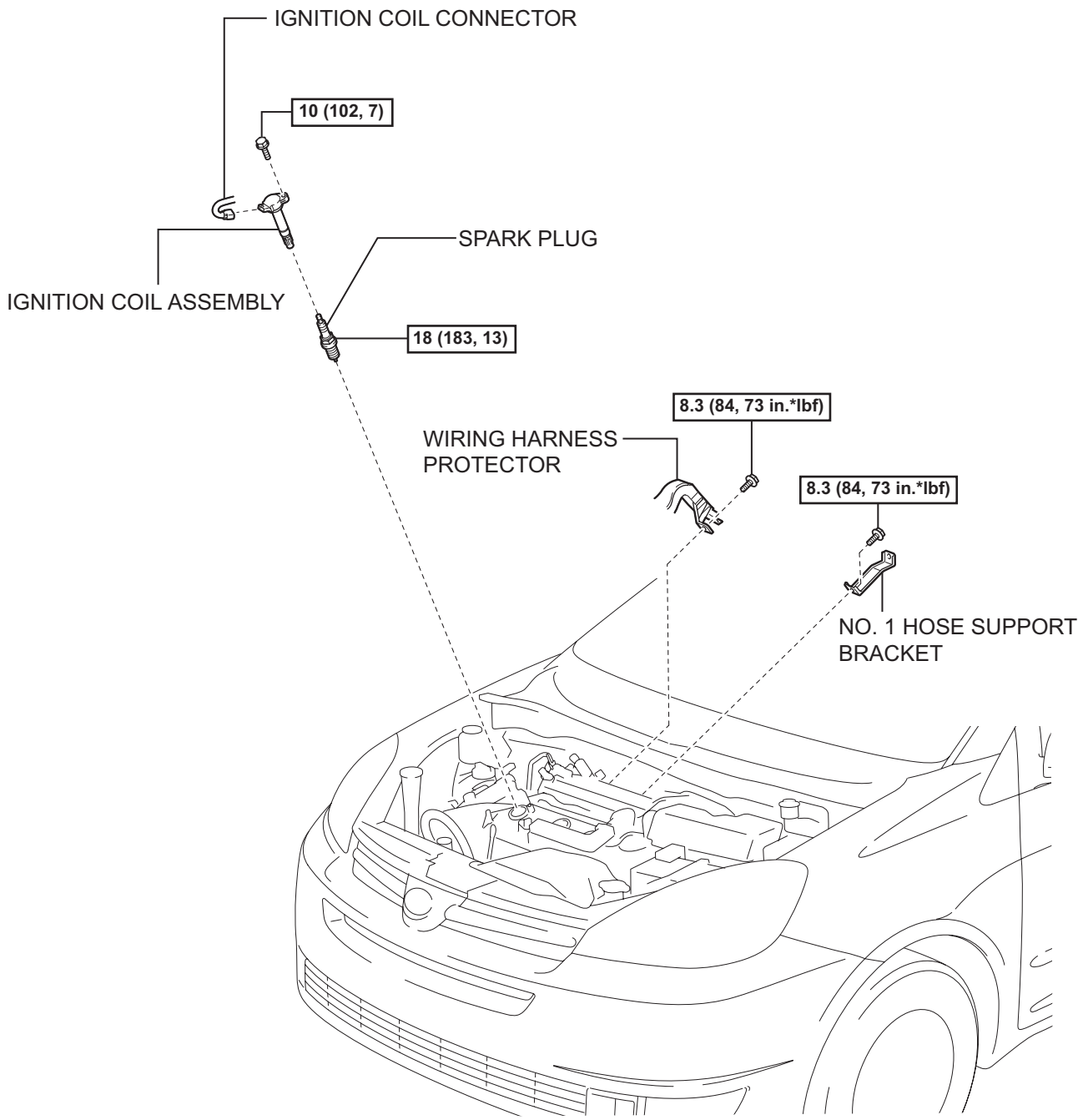
IGNITION COIL CONNECTOR
10 (102, 7)
SPARK PLUG
IGNITION COIL ASSEMBLY
18 (183, 13)
8.3 (84, 73 in.*lbf)
WIRING HARNESS PROTECTOR
8.3 (84, 73 in.*lbf)
NO. 1 HOSE SUPPORT BRACKET
N*m (kgf*cm, ft.*lbf): Specified torque
P
A161838E01