INSPECTION

1. INSPECT STARTER ASSEMBLY

NOTICE:

These tests must be performed within 3 to 5 seconds to avoid burning out the coil.

(a) Perform the pull-in test.

(1) Disconnect the lead wire from terminal C.

(2) Connect the battery to the magnetic switch as shown in the illustration. Check that the clutch pinion gear extends.
If the clutch pinion gear does not move, replace the magnetic switch.

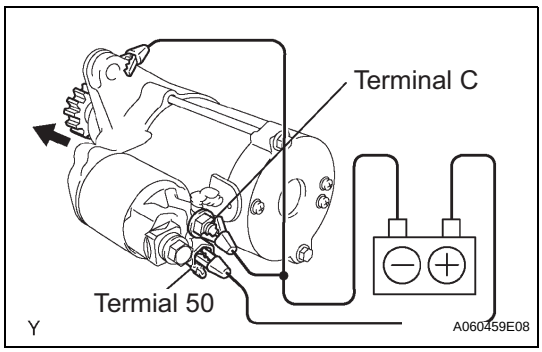

(b) Perform the hold-in test.

(1) Maintain the battery connections in step (a), but disconnect the negative (-) lead from terminal C. Check that the pinion gear remains extended.
If the clutch pinion gear returns inward, replace the magnetic switch.

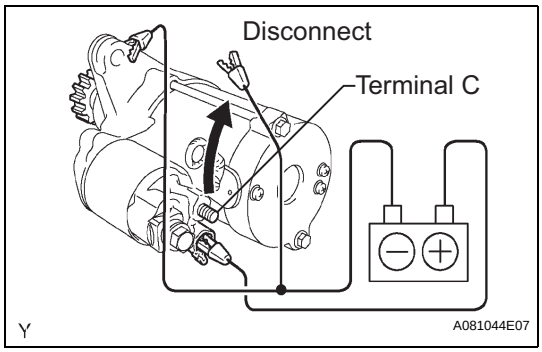

(c) Check the clutch pinion gear return.

(1) Disconnect the negative (-) lead from the switch body. Check that the clutch pinion gear returns.
If the clutch pinion gear does not return, replace the magnetic switch.

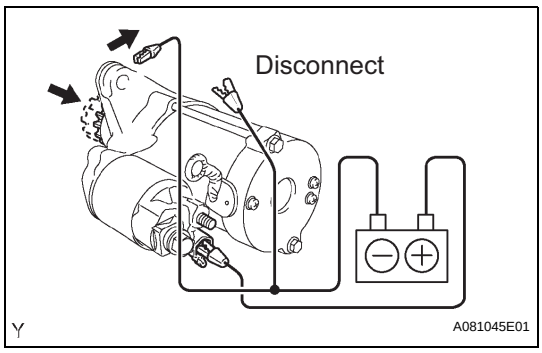

(d) Perform the no-load performance test.

(1) Connect the lead wire to terminal C. Make sure that the lead is not grounded.

(2) Clamp the starter in a vise.

(3) Connect the battery and an ammeter to the starter as shown in the illustration.

(4) Check that the starter rotates smoothly and steadily with the clutch pinion gear extended. Check that the ammeter reads the specified current.
Specified current:
90 A or less at 11.5 V

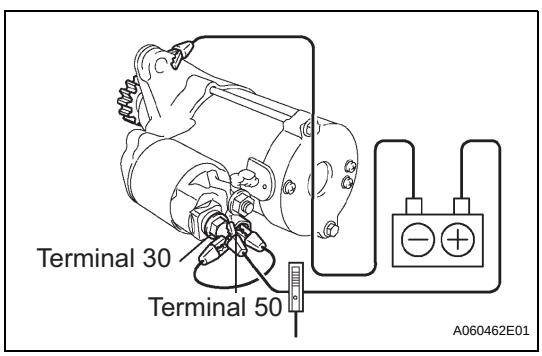

ST

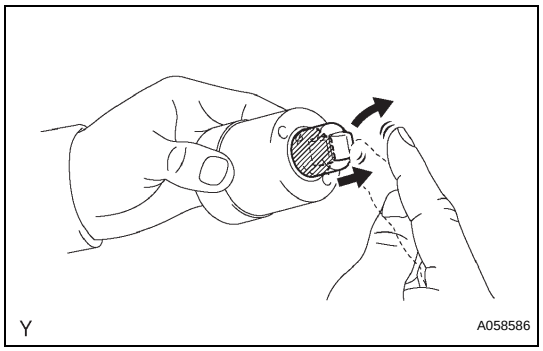

2. INSPECT REPAIR SERVICE STARTER KIT

(a) Check the plunger.

(1) Push in the plunger and check that it returns quickly to its original position.
If necessary, replace the repair service starter kit.

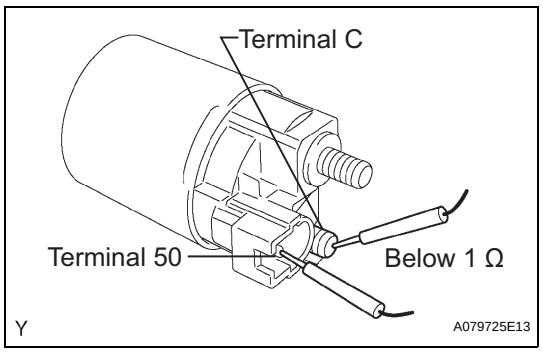

(b) Check if the pull-in coil has an open circuit.

(1) Measure the resistance between terminals 50 and C.
Resistance:
Below 1 Ω
If the result is not as specified, replace the repair service starter kit.

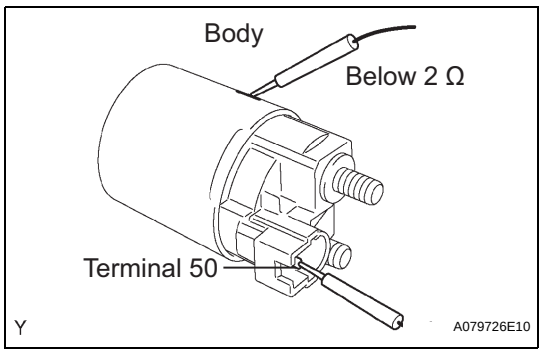

(c) Check if the hold-in coil has an open circuit.

(1) Measure the resistance between terminal 50 and the switch body.
Resistance:
Below 2 Ω
If the result is not as specified, replace the repair service starter kit.

ST

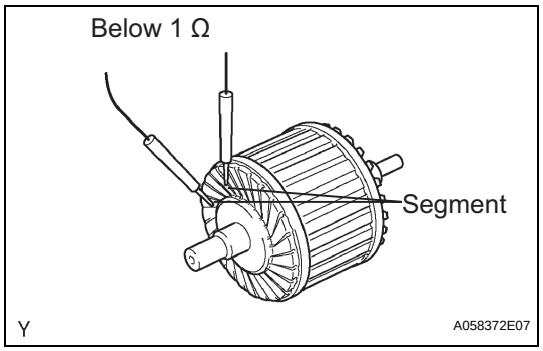

3. INSPECT STARTER ARMATURE ASSEMBLY

(a) Measure if the commutator has an open circuit.

(1) Check the resistance between the segments of the commutator.
Resistance:
Below 1 Ω
If the result is not as specified, replace the armature assembly.

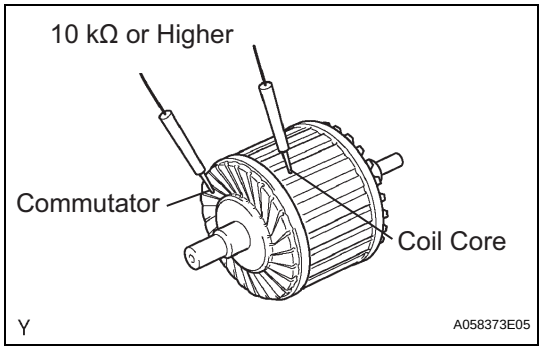

(b) Check if the commutator is grounded.

(1) Measure the resistance between the commutator and armature coil core.
Resistance:
10 kΩ or higher
If the result is not as specified, replace the armature assembly.

(c) Check the commutator for contamination and burns on its surface.
If the surface is dirty or burnt, correct it with sandpaper (No. 400) or a lathe.

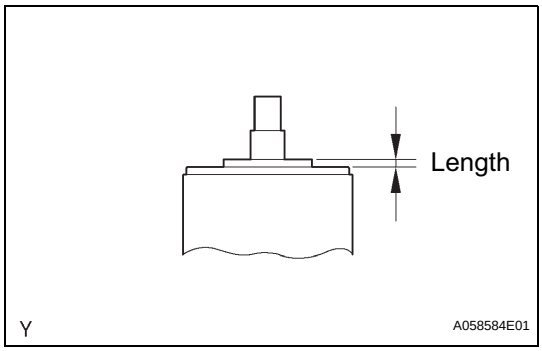

(d) Using a vernier caliper, measure the commutator's length.
Standard length:
3.3 to 4.0 mm (0.1299 to 0.1575 in.)
If the length is greater than the maximum, replace the starter armature.

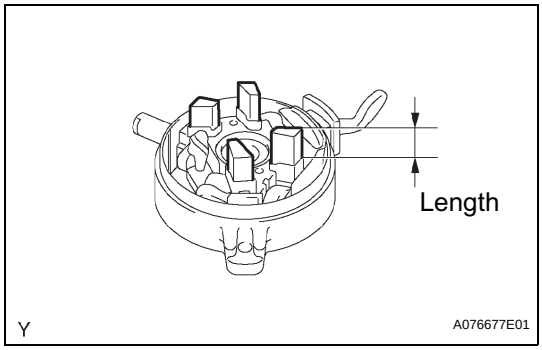

4. INSPECT STARTER COMMUTATOR END FRAME ASSEMBLY

(a) Using a vernier caliper, measure the brush length.
Specified length:
4.0 to 9.0 mm (0.158 to 0.354 in.)
If the length is less than the minimum, replace the starter commutator end frame.

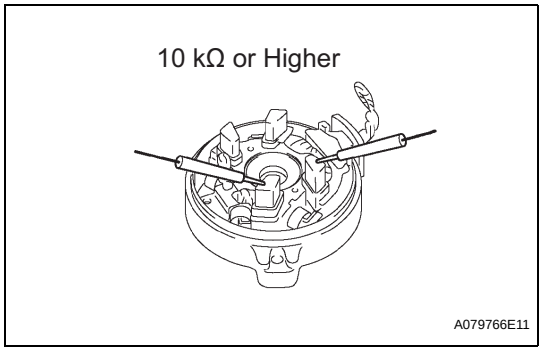

(b) Check the brush insulation.
(1) Measure the resistance between the positive (+) and negative (-) brush.
Resistance:
10 kΩ or higher
If the result is not as specified, repair or replace starter commutator end frame.

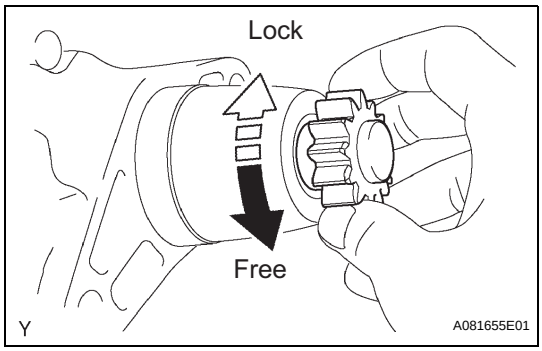

5. INSPECT REPAIR SERVICE STARTER KIT

(a) Check the starter clutch.
(1) Rotate the clutch pinion gear counterclockwise and check that it turns freely. Try to rotate the clutch pinion gear clockwise and check that it locks.
If necessary, replace the service starter kit.

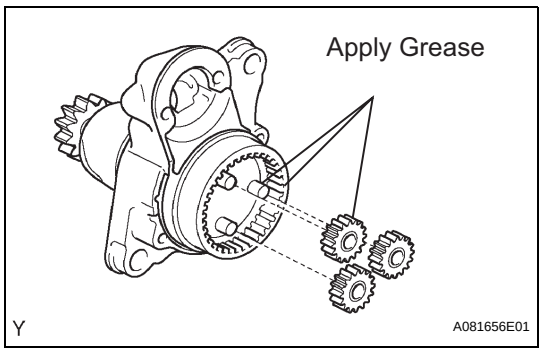

REASSEMBLY

1. INSTALL PLANETARY GEAR

(a) Apply grease to the planetary gears and pin parts of the planetary shaft.
(b) Install the 3 planetary gears.

ST

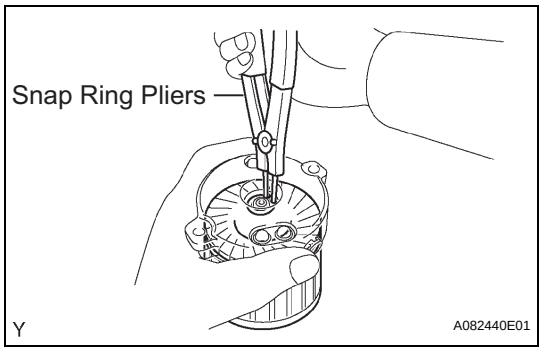

2. INSTALL STARTER ARMATURE ASSEMBLY

(a) Apply grease to the plate washer and the armature shaft.

(b) Install the starter armature to the starter commutator end frame.

(c) Using snap ring pliers, install the plate washer and a new snap ring.

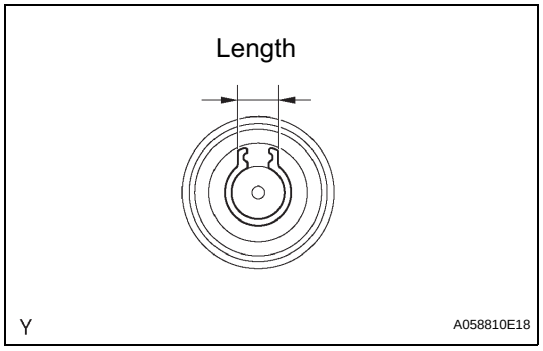

(d) Using a vernier caliper, measure length of the snap ring.

Maximum length:

5.0 mm (0.197 in.)

If the length is greater than the maximum, replace it with a new snap ring.

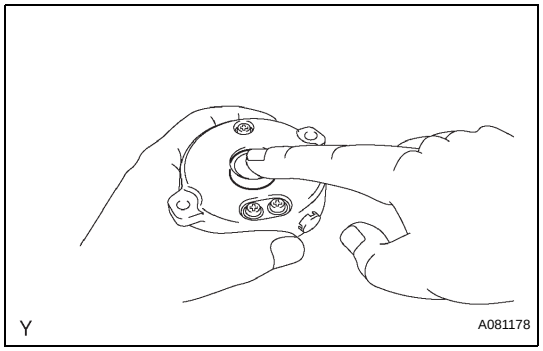

3. INSTALL DRIVE HOUSING STARTER BEARING COVER

(a) Install the drive housing starter bearing cover to the starter commutator end frame.

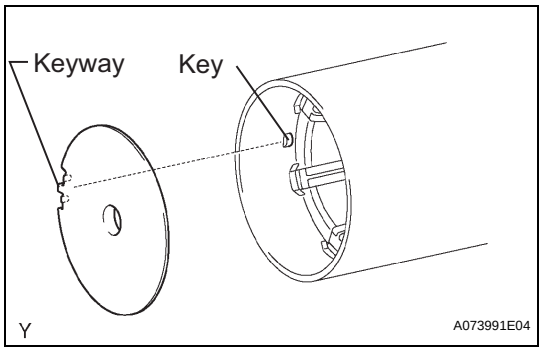

4. INSTALL STARTER ARMATURE PLATE

(a) Insert the starter armature plate to the starter yoke.

(b) Align the keyway of the starter plate with the key inside the starter yoke, and install the starter plate.

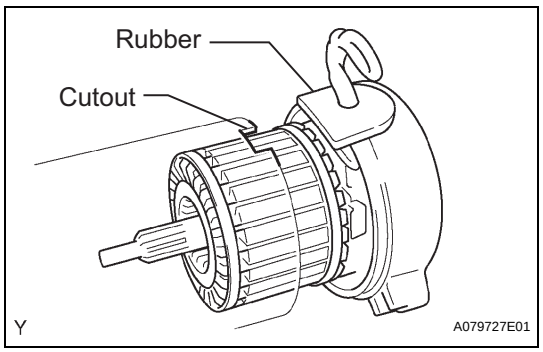

5. INSTALL STARTER COMMUTATOR END FRAME ASSEMBLY

(a) Align the rubber with the convex cutout of starter yoke.

(b) Install starter commutator end frame to the starter yoke.

ST

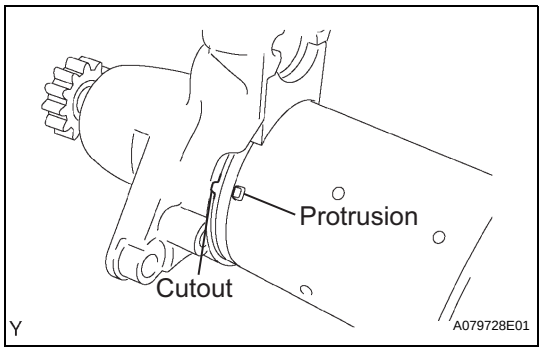

6. INSTALL STARTER YOKE ASSEMBLY

(a) Align the key of the starter yoke with the keyway of repair service starter kit.

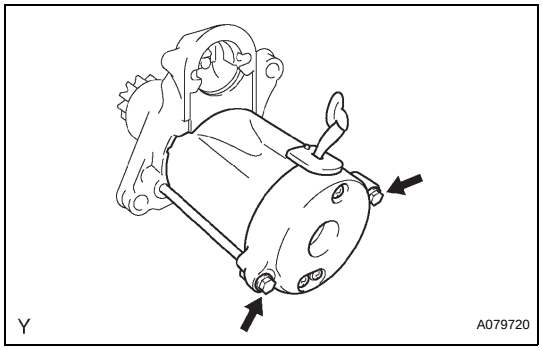

(b) Install the starter yoke with the 2 through bolts.
Torque: 6.0 N*m (61 kgf*cm, 53 in.*lbf)

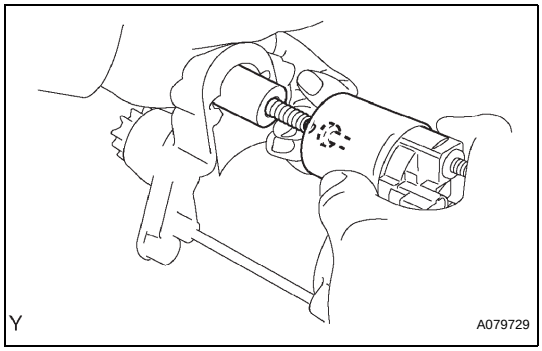

7. INSTALL REPAIR SERVICE STARTER KIT

(a) Apply grease to the plunger and the hook.
(b) Hang the plunger hook of the repair service starter kit to the drive lever.
(c) Install the plunger and return spring.

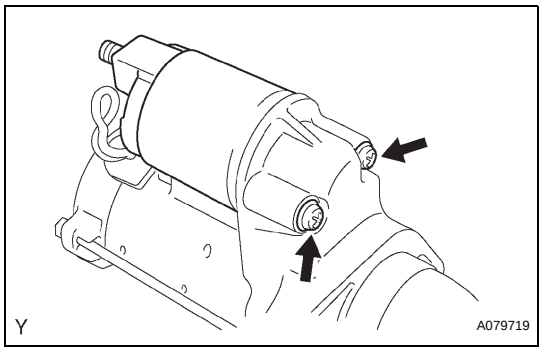

(d) Install the repair service starter kit with the 2 screws.
Torque: 7.5 N*m (76 kgf*cm, 66 in.*lbf)

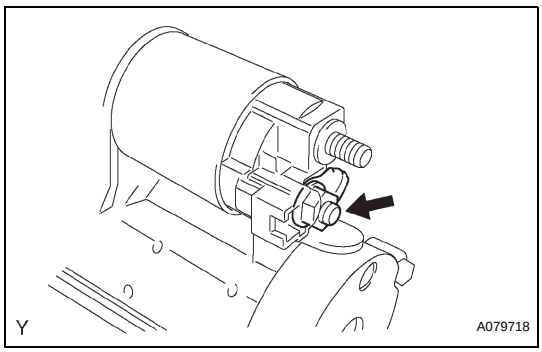

(e) Connect the lead wire to the repair service starter kit with the nut.
Torque: 10 N*m (102 kgf*cm, 7 ft.*lbf)

ST