REMOVAL

1. **REMOVE BATTERY (See page EM-26)**
2. **REMOVE NO. 2 AIR CLEANER INLET (See page EM-28)**
3. **REMOVE AIR CLEANER CAP SUB-ASSEMBLY (See page FU-13)**
4. **REMOVE AIR CLEANER FILTER ELEMENT (See page EM-28)**
5. **REMOVE AIR CLEANER CASE SUB-ASSEMBLY (See page EM-28)**
6. **REMOVE AIR CLEANER BRACKET**
   (a) Remove the 2 bolts and the air cleaner bracket.

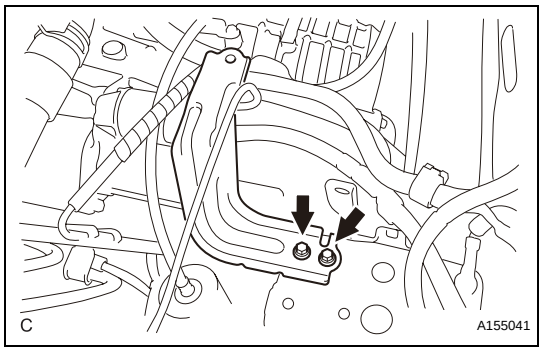

7. **REMOVE NO. 1 AIR CLEANER INLET**
   (a) Remove the bolt and the No. 1 air cleaner inlet.

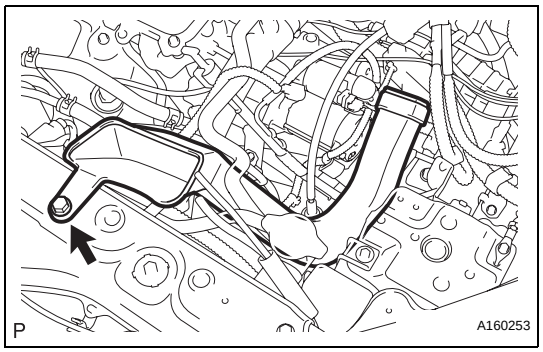

8. **REMOVE STARTER ASSEMBLY**
   (a) Disconnect the starter connector.
   (b) Open the terminal cap and remove the nut and the starter wire.

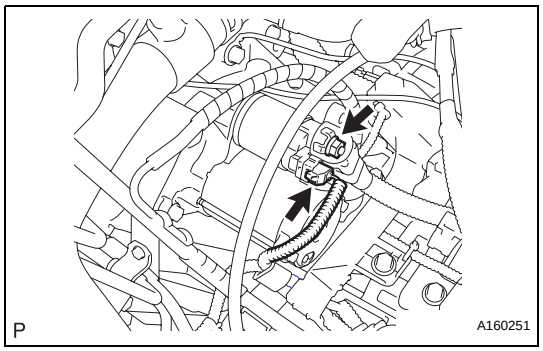

ST

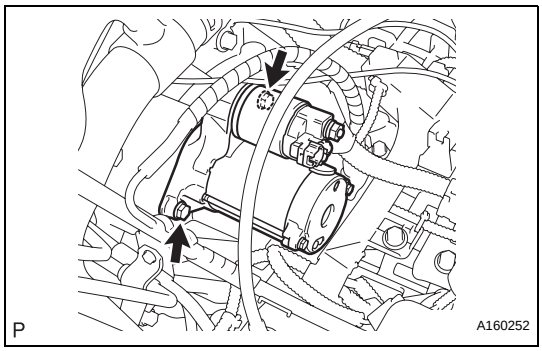

(c) Remove the 2 bolts and the starter.

DISASSEMBLY

1. REMOVE REPAIR SERVICE STARTER KIT

(a) Remove the nut and disconnect the lead wire from the repair service starter kit.

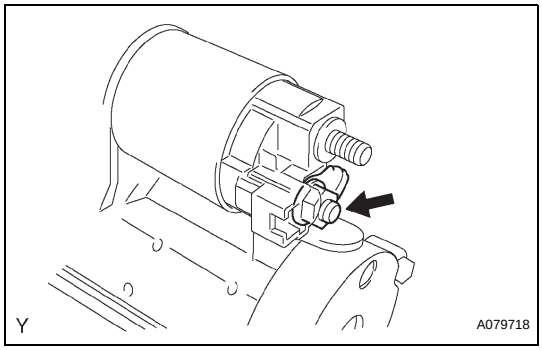

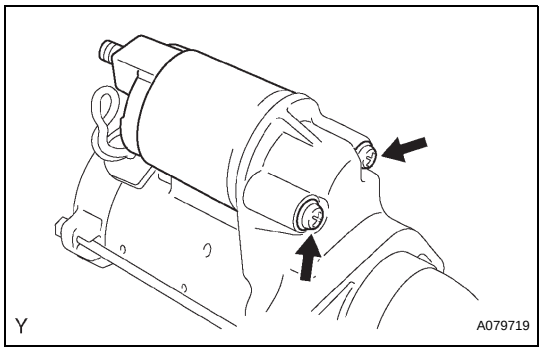

(b) Remove the 2 screws which are used to secure the repair service starter kit to the repair service starter kit.
(c) Remove the repair service starter kit.
(d) Remove the return spring and the plunger from the repair service starter kit.

2. REMOVE STARTER YOKE ASSEMBLY

(a) Remove the 2 through bolts and pull out the starter yoke together with the starter commutator end frame.

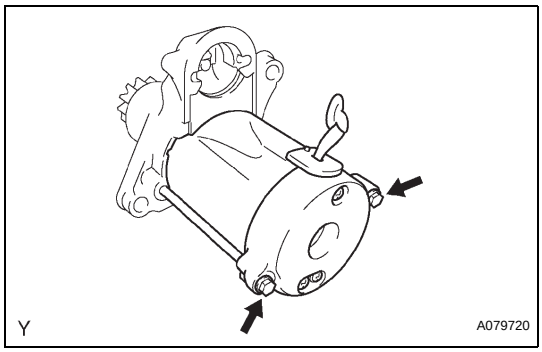

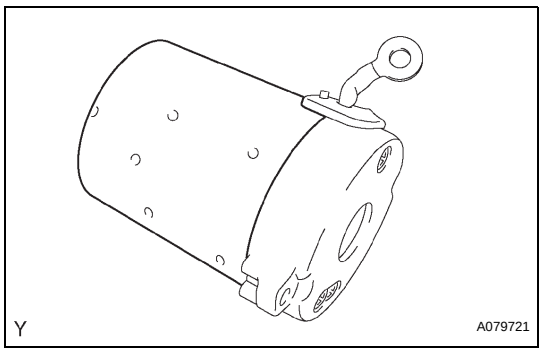

(b) Remove the starter yoke from the starter commutator end frame.

ST

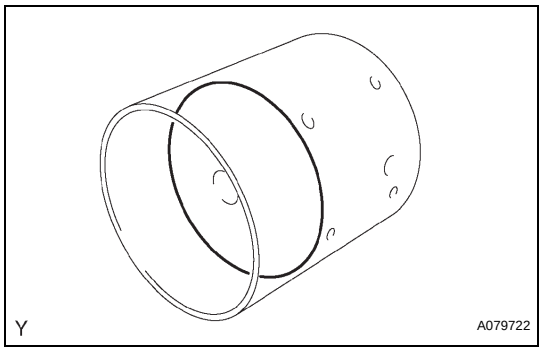

3. REMOVE STARTER ARMATURE PLATE

(a) Remove the starter armature plate from the starter yoke.

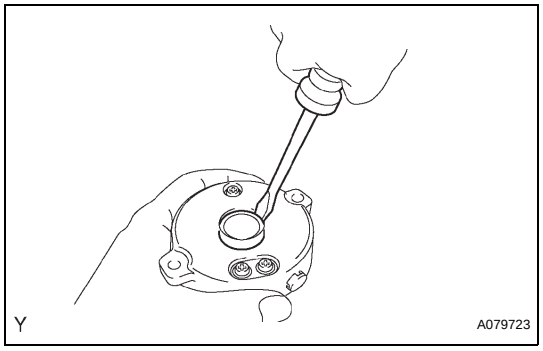

4. REMOVE DRIVE HOUSING STARTER BEARING COVER

(a) Using a screwdriver, remove the drive housing starter bearing cover.

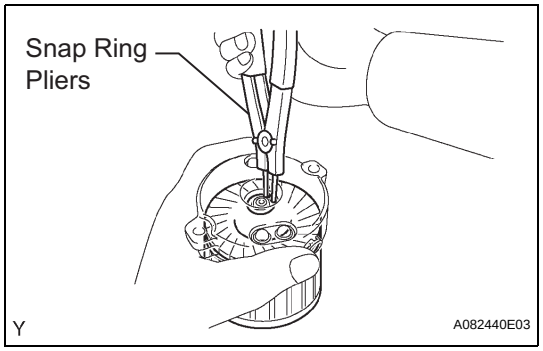

5. REMOVE STARTER ARMATURE ASSEMBLY

(a) Using snap ring pliers, remove the snap ring and plate washer.

(b) Remove the starter armature from the commutator end frame.

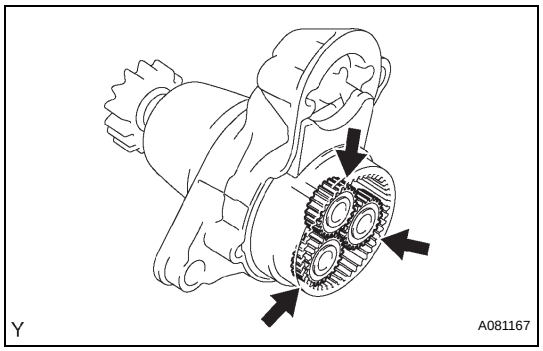

6. REMOVE PLANETARY GEAR

(a) Remove the 3 planetary gears from the repair service starter kit.

ST